BLDG 117 WINDOW SYSTEM REPLACEMENT - BRAVO 117

KALAELOA, STATE OF HAWAII, DEPARTMENT OF DEFENSE, HAWAII ARMY NATIONAL GUARD

FINAL SUBMITTAL

JOB NO. CA-1425-C

VICINITY MAP

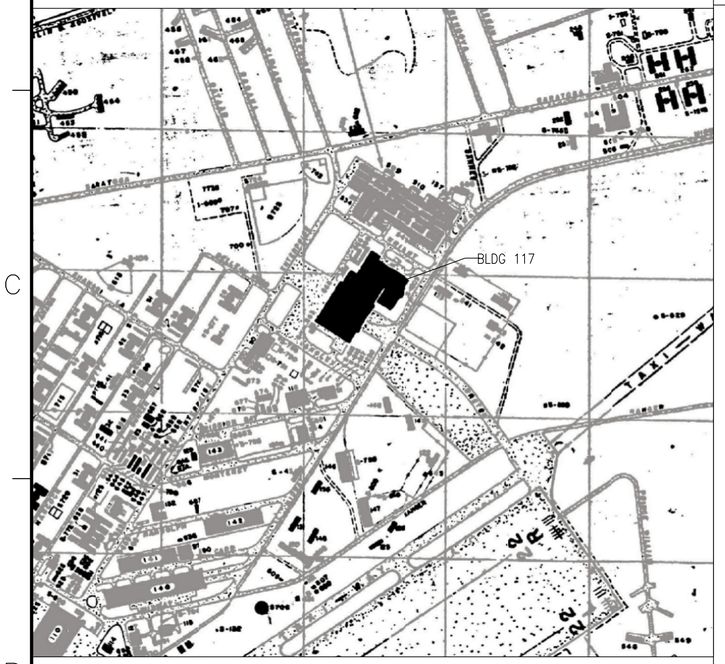

DRAWING INDEX

NO	SHT	DESCRIPTION
01	G001	TITLE SHEET: PROJECT DATA. CONSULTANTS, LEGEND, DRAWING INDEX, GENERAL NOTES AND VICINITY MAP
02	S-001	STRUCTURAL NOTES
03	S-002	STRUCTURAL NOTES AND TYPICAL DETAILS
04	S-101	STRUCTURAL ATFP SITE PLAN
05	S-200	OVERALL EXTERIOR ELEVATIONS
06	S-201	PARTIAL EAST FRAMING ELEVATIONS
07	S-202	PARTIAL WEST FRAMING ELEVATIONS
08	S-203	PARTIAL NORTH FRAMING ELEVATIONS
09	S-204	PARTIAL EAST & WEST FRAMING ELEVATIONS – UPPER LOFT WINDOWS
10	S-501	WINDOW DETAILS
11	S-502	WINDOW DETAILS
12	A-001	ABBREVIATIONS, GENERAL NOTES & MATERIALS
13	A-002	SITE PLAN
14	AD101	FIRST FLOOR DEMOLITION PLAN
15	AD102	MEZZANINE DEMOLITION FLOOR PLAN – 2ND TIER WINDOWS
16	AD103	MEZZANINE DEMOLITION FLOOR PLAN – 3RD TIER WINDOWS
17	AD104	ROOF AND UPPER LOFT DEMOLITION ROOF PLAN
18	AD111	FIRST FLOOR DEMOLITION REFLECTED CEILING PLAN
19	AD201	EXTERIOR ELEVATIONS FOR DEMOLITION NORTH (PARTIAL)
20	A-101	FIRST FLOOR PLAN
21	A-102	MEZZANINE FLOOR PLAN – 2ND TIER WINDOWS
22	A-103	MEZZANINE FLOOR PLAN – 3RD TIER WINDOWS
23	A-104	ROOF AND UPPER LOFT FLOOR PLAN
24	A-111	FIRST FLOOR REFLECTED CEILING PLAN
25	A-200	OVERALL EXTERIOR ELEVATIONS
26	A-201	PARTIAL EAST EXTERIOR ELEVATIONS
27	A-202	PARTIAL WEST EXTERIOR ELEVATIONS
28	A-203	PARTIAL NORTH EXTERIOR ELEVATIONS
29	A-501	WINDOW DETAILS
30	A-502	WINDOW DETAILS
31	A-503	WINDOW DETAILS
32	A-504	DETAILS
33	A-601	WINDOW TYPES, WINDOW GROUP TYPES & WINDOW LEGEND
34	A-602	WINDOW SCHEDULE
35	A-603	WINDOW GROUP DETAIL SCHEDULE, DIAGRAMMATIC OPERABLE WINDOW SYSTEMS, TYPICAL WINDOW DETAIL SECTIONS & GENERAL NOTES

PROJECT DATA

OWNER:	HAWAII ARMY NATIONAL GUARD
ADDRESS:	91-1183 ENTERPRISE AVENUE BARBERS POINT, HAWAII 96862
TAX MAP KEY:	9-1-013:045
LOT AREA:	138 ACRES
BUILDING AREA:	187574 SF
PROJECT AREA:	68890 SF
STATE LAND USE:	AGRICULTURE/INDUSTRIAL/NAVY
ZONING:	F-1 FEDERAL & MILITARY PRESERVATION
FRONT SETBACK: SIDE AND REAR SETBACKS:	
FLOOD ZONE:	D UNDETERMINED FLOOR HAZARD
CONSTRUCTION TYPE:	III-B
OCCUPANCY TYPE:	B (BUSINESS)
OCCUPANCY SEPARATION:	NONE

CONSULTANTS

ARCHITECT:	MASON ARCHITECTS 119 MERCHANT STREET #501, HONOLULU, HI 96813 (808) 536-0556
STRUCTURAL:	MARTIN & CHOCK 1132 BISHOP STREET #1550, HONOLULU, HI 96813 (808) 521-4513
ENVIRONMENTAL:	EMET ENVIRONMETEO SERVICES 94-520 UKEE, WAIPAHU, HAWAII 96797 (808) 671-8383

LEGEND

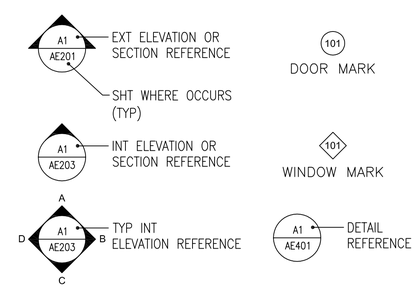

LOCATION MAP

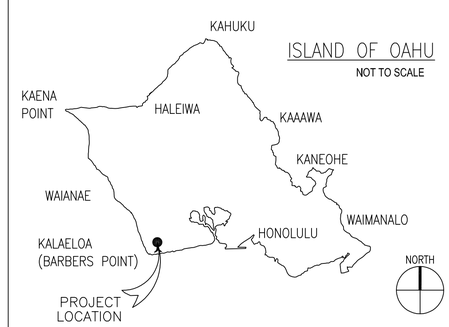

A/E INFO

I CERTIFY THAT THIS DRAWING WAS PREPARED BY ME OR UNDER MY DIRECT SUPERVISION.

BARBARA S. SHIDELER, LICENSED PROFESSIONAL No. 7760, HAWAII, U.S.A.

EXPIRES APRIL 30, 2016 SEAL

SYM	DESCRIPTION	DATE	APPR

SUBMITTAL PHASE: FINAL

SUBMITTAL DATE: FEB 17, 2016

DES MYW | DRW MYW | CHK BSS

STATE OF HAWAII
FACILITY MANAGEMENT OFFICE

HAWAII ARMY NATIONAL GUARD
DEPARTMENT OF DEFENSE
DESIGN AND PROJECT MANAGEMENT BRANCH

BUILDING 117

KALAELOA (FORMER BARBERS POINT NAS), HAWAII

BLDG 117 WINDOW SYSTEM REPLACEMENT - BRAVO 117

TITLE SHEET: PROJECT DATA, CONSULTANTS, LEGEND, DRAWING INDEX, GENERAL NOTES AND VICINITY MAP

SCALE: AS NOTED

STATE JOB NO. CA-1425-C

FEDERAL PROJECT NO. 15140059

SHEET 1 OF 35

G001

GENERAL

1. ALL NEW WORK SHALL CONFORM TO THE INTERNATIONAL BUILDING CODE 2012 EDITION.
2. ALL MATERIALS AND WORKMANSHIP SHALL CONFORM TO THE DRAWINGS.
3. THE STRUCTURAL DRAWINGS REPRESENT THE FINISHED STRUCTURE. THEY DO NOT INDICATE THE METHOD OF CONSTRUCTION. DURING THE CONSTRUCTION PERIOD THE CONTRACTOR SHALL BE RESPONSIBLE FOR THE SAFETY OF THE BUILDING. THE CONTRACTOR SHALL PROVIDE ADEQUATE BRACING, SHORING, ETC. IN ACCORDANCE WITH ALL NATIONAL, STATE, AND LOCAL SAFETY ORDINANCES.
4. THE CONTRACTOR SHALL BE SOLELY RESPONSIBLE FOR COORDINATING THE WORK OF ALL TRADES AND SHALL CHECK ALL DIMENSIONS. ALL DISCREPANCIES SHALL BE CALLED TO THE ATTENTION OF THE CONTRACTING OFFICER AND BE RESOLVED BEFORE PROCEEDING WITH THE WORK.
5. IF ACTUAL FIELD CONDITIONS DIFFER FROM THAT SHOWN ON THE DRAWINGS, THE DESIGNER OF RECORD SHALL BE NOTIFIED.
6. SHOP DRAWINGS REQUIRED BY THE SPECIFICATIONS SHALL BE SUBMITTED TO THE CONTRACTING OFFICER FOR REVIEW PRIOR TO FABRICATION.
7. NOTES AND DETAILS ON DRAWINGS SHALL TAKE PRECEDENCE OVER GENERAL NOTES AND TYPICAL DETAILS.
8. ALL MATERIALS NOT LISTED AS NEW SHALL BE UNDERSTOOD TO BE EXISTING MATERIALS
9. SPECIAL NOTE: ARCHITECTURAL PLANS ARE CONSIDERED A PART OF THE STRUCTURAL DESIGN DRAWINGS AND ARE TO BE USED TO DEFINE DETAIL CONFIGURATION INCLUDING, BUT NOT LIMITED TO, RELATIVE LOCATIONS OF MEMBERS, ELEVATIONS, LOCATIONS OF ALL OPENINGS, DEPRESSIONS, SLOPES, JOINTS, DIMENSIONS, ETC.
10. DESIGN CRITERIA:
    A. BUILDING CODES
       IBC–2012
    B. DESIGN LIVE LOADS
       NOT APPLICABLE
    C. WIND
       1. BASIC WIND SPEED = 130 MPH
       2. I_W = 1.0
       3. EXPOSURE C
       4. TOPOGRAPHIC FACTOR K_{ZT} = 1.2
       5. DIRECTIONALITY FACTOR K_D = 0.75
       6. ENCLOSED C_{pi} = ±0.18
       7. MAXIMUM COMPONENTS/CLADDING PRESSURES
          WINDOWS = ±66 PSF
    D. ATFP LOADS
       WORST CASE 1 – EXPLOSIVE I AT 175 FT
       WORST CASE 2 – EXPLOSIVE II AT 73 FT
       SEE STRUCTURAL SITE PLAN FOR LOCATIONS

STRUCTURAL STEEL

1. STRUCTURAL STEEL SHALL BE DETAILED, FABRICATED AND ERECTED IN ACCORDANCE WITH THE "AISC SPECIFICATION FOR THE DESIGN, FABRICATION AND ERECTION OF STRUCTURAL STEEL FOR BUILDINGS."
2. ALL STRUCTURAL STEEL SHALL CONFORM TO THE ASTM DESIGNATION A36, UNLESS OTHERWISE NOTED.
3. WIDE FLANGE W SECTIONS AND WT SECTIONS SHALL CONFORM TO ASTM A992, GRADE 50.
4. PIPE SECTIONS SHALL CONFORM TO ASTM A53, GRADE B. HOLLOW STEEL SECTIONS (HSS) SHALL CONFORM TO ASTM A 500, GRADE B.
5. ANCHOR BOLTS SHALL CONFORM TO ASTM F1554, GR 55. HIGH STRENGTH BOLTS SHALL CONFORM TO ASTM A325–N U.O.N.
6. THE STRUCTURAL STEEL FABRICATOR SHALL FURNISH SHOP DRAWINGS OF ALL STEEL FOR ARCHITECT'S REVIEW BEFORE FABRICATION.
7. BOLT HOLES IN STEEL SHALL BE 1/16" LARGER DIAMETER THAN NOMINAL SIZE OF BOLT USED, EXCEPT AS NOTED.
8. ALL STRUCTURAL STEEL CONTACT SURFACES JOINED BY HIGH STRENGTH BOLTS SHALL BE LEFT UNPAINTED.
9. ALL WELDS SHALL BE IN CONFORMITY WITH THE STRUCTURAL WELDING CODE AWS D1.1 OF THE AMERICAN WELDING SOCIETY.
10. ALL STRUCTURAL STEEL AND MISCELLANEOUS METAL SHALL BE HOT–DIP GALVANIZED AFTER FABRICATION.
11. ALL GROUT BELOW BASE PLATES, BEAMS BEARING ON CONCRETE OR MASONRY WALLS AND COLUMNS, ETC., SHALL BE NON–SHRINK WITH A MINIMUM COMPRESSIVE STRENGTH OF F'c = 7,000 PSI AT 28 DAYS.
12. NEW STRUCTURAL STEEL SHALL BE PRIMED IN THE SHOP EXCEPT AT WELD LOCATIONS. FINISH COATINGS SHALL BE PROVIDED TO MATCH THE EXISTING STRUCTURAL STEEL AND PER THE PAINT SPECIFICATIONS.
13. REMOVE PAINT FROM EXISTING STEEL AT AREAS TO BE WELDED TO NEW STEEL MEMBERS. PRIME AND REFINISH IN ACCORDANCE WITH THE PAINT SPECIFICATIONS.

CONCRETE

1. ALL CONCRETE SHALL BE PREMIXED AND SUPPLIED IN BAGS WITH A MINIMUM SPECIFIED STRENGTH OF 5000 PSI. IT SHALL BE MIXED IN ACCORDANCE WITH MANUFACTURER'S INSTRUCTIONS.
2. CONCRETE SHALL CONFORM TO THE "BUILDING CODE REQUIREMENTS FOR STRUCTURAL CONCRETE" (ACI 318).
3. PORTLAND CEMENT SHALL CONFORM TO ASTM C–150 TYPE II.
4. AGGREGATE FOR HARDROCK CONCRETE SHALL CONFORM TO ALL REQUIREMENTS AND TESTS OF ASTM C–33.
5. CONCRETE MIXING OPERATION, ETC., SHALL CONFORM TO ASTM C–94.
6. PLACEMENT OF CONCRETE SHALL CONFORM TO ACI STANDARD 301
7. MINIMUM CLEAR COVERAGE OF CONCRETE OVER OUTER REINFORCING BARS SHALL BE AS FOLLOWS:
   A. FORMED CONCRETE EXPOSED TO EARTH OR WEATHER..... 1 1/2"
   B. CONCRETE NOT EXPOSED TO WEATHER OR IN CONTACT WITH GROUND SLABS ..... 3/4"
8. ALL REINFORCING BARS, ANCHOR BOLTS AND OTHER CONCRETE INSERTS SHALL BE WELL SECURED IN POSITION PRIOR TO PLACING CONCRETE.
9. ALL ROUGHENED SURFACES IN CONCRETE SHALL BE MADE WITH A MINIMUM AMPLITUDE OF 1/4".

CODE - REQUIRED SPECIAL INSPECTION

SPECIAL INSPECTION IS NOT REQUIRED FOR THIS PROJECT DUE THE MINOR SCOPE OF STRUCTURAL REPAIRS. INDICATE WHEN STRUCTURAL WORK IS COMPLETE FOR DESIGNER OF RECORD TO PROVIDE STRUCTURAL OBSERVATION.

STRUCTURAL ABBREVIATIONS

A.B.	ANCHOR BOLT
ALT.	ALTERNATE
APPROX.	APPROXIMATE
ARCH.	ARCHITECTURAL
(B), BOT.	BOTTOM
BLDG.	BUILDING
BM.	BEAM
BTWN	BETWEEN
C.J.	CONSTRUCTION JOINT
℄, CL	CENTERLINE
CLR.	CLEAR(ANCE)
CMU	CONCRETE MASONRY UNIT
COL.	COLUMN
CONC.	CONCRETE
CONN.	CONNECTION
CONST.	CONSTRUCTION
C.P.	COMPLETE PENETRATION
CONT.	CONTINUOUS
DBL	DOUBLE
DET.	DETAIL
DIA., Ø	DIAMETER
DIM.	DIMENSION
DWG.	DRAWING
EA.	EACH
E.F.	EACH FACE
EL.	ELEVATION
ELEV.	ELEVATION, ELEVATOR
EQ.	EQUAL
E.S.	EACH SIDE
E.W.	EACH WAY
EXP.	EXPANSION
EXT.	EXTERIOR
FL.	FLOOR
F.O.C.	FACE OF CONCRETE
FIN.	FINISH
GA.	GAUGE
GALV.	GALVANIZED
(H),HORIZ.	HORIZONTAL
INFO.	INFORMATION
INTERM.	INTERMEDIATE
JT.	JOINT
LLH	LONG LEG HORIZONTAL
LLV	LONG LEG VERTICAL
LONG.	LONGITUDINAL
MAX.	MAXIMUM
M.B.	MACHINE BOLT
MFGR.	MANUFACTURER
MIN.	MINIMUM
MISC.	MISCELLANEOUS
N.T.S.	NOT TO SCALE
O.C.	ON CENTER
O.D.	OUTSIDE DIAMETER
O.H.	OPPOSITE HAND
OPG.	OPENING
OPP.	OPPOSITE
PART.	PARTIAL, PARTITION
PL., ℙ	PLATE
P.P.	PARTIAL PENETRATION
R.O.	ROUGH OPENING
REINF.	REINFORCED, REINFORCEMENT
REQ'D	REQUIRED
SCHED.	SCHEDULE
SECT.	SECTION
SHT.	SHEET
SIM.	SIMILAR
SQ.	SQUARE
STD.	STANDARD
STIFF.	STIFFENER
STRUCT.	STRUCTURAL
SYM.	SYMMETRICAL
(T)	TOP
T&B	TOP & BOTTOM
THRU	THROUGH
T.O.S.	TOP OF SLAB, TOP OF STEEL
T.O.W.	TOP OF WALL
TYP.	TYPICAL
U.O.N.	UNLESS OTHERWISE NOTED
(V),VERT.	VERTICAL
V.I.F.	VERIFY IN FIELD
W/	WITH
W.P.	WORKING POINT

HAWAII ARMY NATIONAL GUARD

A/E INFO

GARY CHOCK
LICENSED PROFESSIONAL ENGINEER
No. 5657-S
HAWAII U.S.A.
Expiration Date of the License: 4/30/16
SEAL

SYM	DESCRIPTION	DATE	APPR

SUBMITTAL PHASE: FINAL
SUBMITTAL DATE: FEB 17, 2016
DES LC | DRW CAD | CHK LC

STATE OF HAWAII
FACILITY MANAGEMENT OFFICE
BUILDING 117

DEPARTMENT OF DEFENSE
DESIGN AND PROJECT MANAGEMENT BRANCH
HAWAII ARMY NATIONAL GUARD
KALAELOA (FORMER BARBERS POINT NAS), HAWAII
BLDG 117 WINDOW SYSTEM REPLACEMENT - BRAVO 117

STRUCTURAL NOTES

SCALE: AS NOTED
STATE JOB NO. CA–1425–C
FEDERAL PROJECT NO. 15140059
SHEET 02 OF 35
S-001

CONCRETE REPAIRS

1. EXCAVATE ALL LOOSE FRACTURED CONCRETE AROUND SPALL. IN GENERAL, EXTEND LIMITS OF EXCAVATION UNTIL SOUND CONCRETE IS ENCOUNTERED OR AS SHOWN ON THE DRAWINGS. LIMIT CHIPPING GUN TO 15 LB.
2. CLEAN ALL EXISTING REBAR OF ALL LOOSE RUST BY SANDBLAST OR NEEDLE GUN.
3. ROUGHEN SURFACE TO 1/4" AMPLITUDE AT ALL INTERFACE CONTACT WITH EXISTING CONCRETE SUBSTRATE. PROVIDE UNDERCUT AT PERIMETER OF CONCRETE PATCH AS SHOWN ON DETAILS.
4. CLEAN ALL EXCAVATED CONCRETE SURFACES OF DEBRIS, DUST, GREASE, OIL, ETC.
5. IN GENERAL, THE FOLLOWING APPLIES TO REPLACING/SUPPLEMENTNG CORRODED REBAR:
   A. IF CROSS SECTIONAL LOSS OF BAR IS LESS THAN 10% AFTER REMOVING ALL CORROSION PRODUCT, THE BAR DOES NOT REQUIRE REPLACEMENT/SUPPLEMENT.
   B. IF CROSS SECTIONAL LOSS OF BAR IS 10% TO 20% AFTER REMOVING ALL CORROSION PRODUCT, CONTACT ENGINEER FOR EVALUATION AND DIRECTION.
   C. IF CROSS SECTIONAL LOSS OF BAR IS GREATER THAN 20% AFTER REMOVING ALL CORROSION PRODUCT, REPLACE OR SUPPLEMENT WITH SPLICED BARS.
6. ALL REPLACEMENT REINFORCING STEEL SHALL BE LAP SPLICED PER DETAILS SHOWN ON THE DRAWINGS. SPLICES SHALL BE LOCATED AS DETAILED. WHERE LAP OR SPLICE LOCATIONS ARE NOT SPECIFICALLY INDICATED, SPLICES SHALL BE STAGGERED.
7. IN GENERAL, CONCRETE REPAIRS AND RELATED WORK SHALL CONFORM TO THE FOLLOWING ICRI (INTERNATIONAL CONCRETE REPAIR INSTITUTE) TECHNICAL GUIDELINES, UNLESS OTHERWISE INDICATED ON THE DRAWINGS:
   A. GUIDELINE NO. 03730 "GUIDELINE FOR SURFACE PREPARATION FOR THE REPAIR OF DETERIORATED CONCRETE RESULTING FROM REINFORCING STEEL CORROSION" (1995)
   B. GUIDELINE NO. 03731 "GUIDE FOR SELECTING APPLICATION METHODS FOR THE REPAIR OF CONCRETE SURFACES" (1996)
   C. GUIDELINE NO. 03733 "GUIDE FOR SELECTING AND SPECIFYING MATERIALS FOR REPAIR OF CONCRETE SURFACES" (1997)
8. PRODUCT MANUFACTURERS' REPRESENTATIVES SHALL BE PRESENT AT THE JOB SITE TO SUPERVISE AND INSPECT ALL SAMPLE/PROTOTYPE REPAIRS, AND SHALL PERIODICALLY VISIT THE JOB SITE TO INSPECT REPAIRS FOR CORRECT PRODUCT USAGE.
9. CONTRACTOR SHALL SUBMIT DESIGNS FOR ALL CONCRETE MIXES.
10. IN LIEU OF BONDING AGENTS, USE THE FOLLOWING PROCEDURES TO ENHANCE THE BOND OF NEW MORTAR/CONCRETE TO EXISTING CONCRETE SUBSTRATE UNLESS OTHERWISE NOTED IN SPECIFIC DETAILS:
    A. POURED-IN-PLACE NON-SHRINK GROUT:
       SATURATE CONCRETE SUBSTRATE WITH WATER SEVERAL HOURS PRIOR TO PLACEMENT OF GROUT. REMOVE WATER AND MAINTAIN SSD (SATURATED SURFACE DRY) CONDITION DURING PLACEMENT OF GROUT. SEE MANUFACTURER'S INSTRUCTIONS.
    B. TROWEL APPLIED MORTAR:
       PRIME CONCRETE SUBSTRATE BY SCRUBBING BOND COAT WITH STIFF MASON'S BRUSH INTO CONCRETE SUBSTRATE. SEE MANUFACTURER'S INSTRUCTIONS.
    C. CAST-IN-PLACE CONCRETE:
       THOROUGHLY HOSE DOWN ALL CONCRETE SUBSTRATE WITH CLEAN WATER. SUBSTRATE MUST BE MAINTAINED AT SSD DURING ENTIRE CONCRETE PLACEMENT OPERATION.
11. PRIOR TO PLACEMENT OF PATCH MATERIAL, THE EXPOSED CONCRETE SHALL BE SATURATED SURFACE DRY WITH NO WATER ACCUMULATION.
12. POLYMER MODIFIED REPAIR MATERIALS SHALL BE APPLIED TO FILL VOIDS. FOR PATCH DEPTHS IN EXCESS OF 1 INCH, 3/8 INCH AGGREGATES SHALL BE ADDED.
13. FOR VERTICAL AND OVERHEAD PATCHES, POLYMER MODIFIED CONCRETE SHALL BE FORMED AND PLACED IN THE PATCH AREA. THE CONCRETE SHALL BE EXTERNALLY AND/OR INTERNALLY VIBRATED AS IT IS PLACED IN THE FORMS TO ACHIEVE THE PROPER CONSOLIDATION TO FILL ALL CORNERS OF THE FORMS; ALLOWING SUFFICENT SPACE AT THE TOP OF THE FORMED AREA TO PROPERLY PLACE AND CONSOLIDATE THE CONCRETE.
14. FOLLOWING THE INITIAL SET OF THE POLYMER-MODIFIED CONCRETE AT FORMED AREAS, THE SPACE AT THE TOP OF THE PATCH AREA SHALL BE FILLED WITH PATCHING MORTAR.
15. THE SURFACE FINISH SHALL MATCH ADJACENT CONDITIONS.
16. FORMS SHALL BE REMOVED AFTER FIVE DAYS OF CURING. PATCHES SHALL BE INSPECTED FOR IMPROPER CONSOLIDATION OR CRACKING AROUND THE PERIMETER OR IN THE PATCH. IF THESE CONDITIONS EXIST, NOTIFY THE ARCHITECT FOR POSSIBLE REMEDIAL ACTION.
17. CONCRETE WORK SHALL CONFORM TO THE FOLLOWING CODES AND STANDARDS:
    A. ACI 301 "SPECIFICATION FOR STRUCTURAL CONCRETE IN BUILDINGS"
    B. ACI 304 "GUIDE FOR MEASURING, MIXING, TRANSPORTING, AND PLACING CONCRETE"
    C. ACI 304.2 "PLACING CONCRETE BY PUMPING METHODS"
    D. ACI 305 "HOT WEATHER CONCRETING"
    E. ACI 309 "STANDARD PRACTICE FOR CONSOLIDATION OF CONCRETE"
    F. ACI 315 "DETAILS AND DETAILING OF CONCRETE REINFORCING"
    G. ACI 318 "BUILDING CODE REQUIREMENTS FOR REINFORCED CONCRETE"
    H. ACI 347 "RECOMMENDED PRACTICE FOR CONCRETE FORMWORK"
18. MINIMUM CONCRETE COVER OF REINFORCING STEEL FOR "PATCHES," REPAIRS, ETC., SHALL BE AS GIVEN IN CONCRETE NOTE 10 ON SHEET S0.1.

SUMMARY OF ACCEPTABLE CONCRETE REPAIR PRODUCTS

1. THE CONTRACTOR SHALL VERIFY WITH THE MATERIAL SUPPLIERS, THE COMPATIBILITY OF ALL PRODUCTS AND PROCEDURES UTILIZED FOR REPAIRS, BEFORE START OF WORK. IF ANY MODIFICATIONS NEED TO BE MADE, THEY SHALL BE BROUGHT TO THE IMMEDIATE ATTENTION OF THE ENGINEER PRIOR TO THE START OF ANY WORK.
2. THE FOLLOWING ARE ACCEPTABLE OPTIONS FOR PRODUCTS UTILIZED IN THE REPAIR DETAILS:

PRODUCT DESCRIPTION	ACCEPTABLE ALTERNATIVE PRODUCTS
A. FLOWABLE GROUT	• THOROC LA, THORO SYSTEMS • EMACO T-430, MASTER BUILDERS • SET GROUT, MASTER BUILDERS • MASTERFLOW 713, MASTER BUILDERS • MASTERFLOW 928, MASTER BUILDERS • EUCO THINCOAT, EUCLID CHEMICALS • SIKA 222, SIKA CORP.
B. OVERHEAD & VERTICAL PATCH MATERIAL; TROWELABLE	• SIKAREPAIR 223, SIKA CORPORATION • THORITE RAPID VERTICAL, THORO SYSTEMS • POWERCRETE POWERTOP GEL PATCH • SONNEBORN SONOPATCH 200 • EUCO VERTICOAT, EUCLID CHEMICAL COMPANY • MAPEI PLANITOPXS
C. CAST-IN-PLACE CONCRETE FOR DEEP PATCH REPAIRS AND FOR RECONSTRUCTED, ENCAPSULATED, AND/OR REPLACED CONCRETE MEMBERS & MICROPILES	• CONCRETE PROPERTIES: F'c = 6000 PSI MAX. W/C RATIO = 0.40 3/8" DIAMETER PEA GRAVEL HIGH RANGE WATER REDUCER (MAX. 6-1/2" SLUMP) SHRINKAGE COMPENSATING ADMIXTURE NOTE: PRE-MIXED BAGGED CONCRETE SUCH AS QUIKCRETE (6000 PSI) MIX OR SIKAGROUT 212 WITH PEA GRAVEL (25#/55# BAG OF DRY MIX BUT NOT EXCEEDING 25% BY VOLUME) MAY BE USED W/THE ABOVE ADMIXTURES.
D. SHRINKAGE REDUCING ADMIXTURE	• GRACE ECLIPSE 2% BY WEIGHT OF CEMENT; AT 1.5 GALS. PER YD.
E. STEEL ANCHORS	• ½"ø ZINC PLATED HILTI KWIK-CON II HEX HEAD SCREWS IN 1½" DEEP HOLE DRILLED WITH MATCHING DRILL BIT • ½"ø ZINC PLATED REDHEAD TRUBOLT IN 1½" DEEP HOLE DRILLED WITH MATCHING DRILL BIT
F. BONDING AGENT	• SIKA ARMATEC 110
G. HI-MOD EPOXY GEL	• SIKADUR 31 HI-MOD EPOXY GEL • UNITEX PRO-POXY 300
H. JOINT SEALER	• SIKAFLEX - 15 LM, SIKA CORP. • SONNEBORN NP1, CHEMREX
J. NON-SHRINK GROUT	• SIKA GROUT 212, SIKA CORP. • MASTERFLOW 928, MASTER BUILDERS • SIKA DUR 31, SIKA CORP.
K. EPOXY TO SET ANY DOWELS	• HILTI RE500-SD EPOXY • SIMPSON SET-XP EPOXY • RAMSET EPCON C5
L. GRAVITY-FED CRACK PENETRATING SEALER	• SIKA PRONTO 19 • SONNEBORN EPOFIL SLV • UNITEX PROSEAL HS
M. EPOXY INJECTION RESIN	• UNITEX PRO-POXY 100

NOTE: THESE NOTES ARE FOR REPAIRS WHEN DAMAGED CONCRETE IS DISCOVERED AND FOR REPAIR OF CONCRETE WHICH HAS BEEN DAMAGED IN DEMOLITION. THEY SHALL NOT BE USED UNLESS SPECIFICALLY COORDINATED WITH THE STRUCTURAL ENGINEER FOR EACH LOCATION.

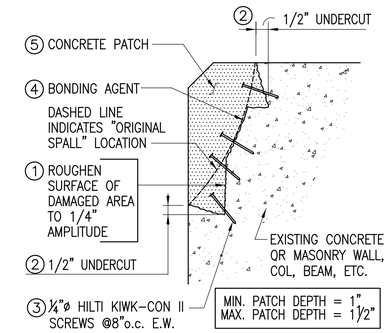

(A) HORIZONTAL/CORNER SPALL

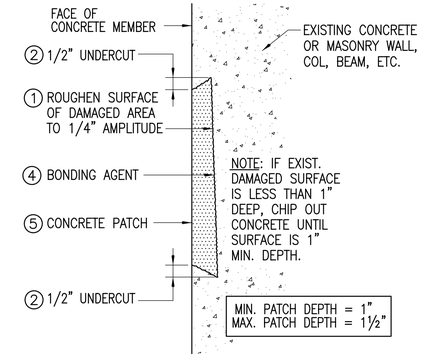

(B) VERTICAL SURFACE SPALL

PATCH PROCEDURE AT CONCRETE OR MASONRY

1. CHIP OUT ALL LOOSE AND FRACTURED CONCRETE AND ROUGHEN SURFACE TO 1/4" AMPLITUDE. IF EXPOSED REINF. IS FOUND, SEE "TYPE S2 REPAIR" THIS SHEET.
2. UNDERCUT AT PERIMETER OF PATCH AREA 1/2" AS SHOWN.
3. INSTALL ANCHORS INTO EXISTING CONCRETE AS SHOWN.
4. APPLY BONDING AGENT TO CONCRETE SURFACE.
5. INSTALL CONCRETE PATCH ACCORDING TO MANUFACTURER'S RECOMMENDATIONS.

DETAIL - TYPE S1 SHALLOW PATCH REPAIR (C4)

NO SCALE — VERTICAL & HORIZONTAL SURFACE SPALL REPAIRS WITHOUT FORMING AND WITHOUT EXPOSED REBAR

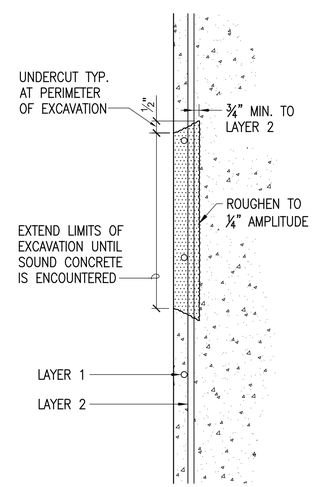

REPAIR PROCEDURE

1. CHIP OUT ALL LOOSE AND FRACTURED CONCRETE AROUND SPALL. EXTEND LIMITS OF EXCAVATION UNTIL SOUND CONCRETE IS ENCOUNTERED.
2. ROUGHEN SURFACE TO 1/4" AMPLITUDE, CREATE 1/2" UNDERCUTS CUT AT PERIMETER. CLEAN ALL REBAR TO BRIGHT STEEL CONDITION AND COAT ZRC COLD GALVANIZING COMPOUND OR APPROVED EQUIVALENT. REPLACE CORRODED BARS WHICH HAVE LOST MORE THAN 20% OF CROSS -SECTION AND/OR AS DIRECTED BY THE ENGINEER. USE QUICK-WEDGE SPLICE TO SPLICE NEW REBAR TO EXISTING REBAR.
3. PROVIDE SHADE ABOVE WORK AREA OF PATCHES IF AREA IS EXPOSED TO DIRECT SUNLIGHT DURING CURING.
4. APPLY BONDING AGENT TO CONCRETE SURFACE PER MANUFACTURER'S INSTRUCTIONS.
5. INSTALL PATCH ACCORDING TO MANUFACTURER'S RECOMMENDATIONS.
6. FINISH AND CURE AS REQUIRED.

DETAIL - TYPE S2 DEEP PATCH REPAIR (A4)

NO SCALE — FOR CONC/CMU WALL AND CURB REPAIR

HAWAII ARMY NATIONAL GUARD

A/E INFO

GARY CHOCK — LICENSED PROFESSIONAL ENGINEER No. 5657-S — HAWAII, U.S.A.
Expiration Date of the License: 4/30/16
SEAL

SYM	DESCRIPTION	DATE	APPR

SUBMITTAL PHASE: FINAL
SUBMITTAL DATE: FEB 17, 2016
DES LC | DRW CAD | CHK LC

DEPARTMENT OF DEFENSE
HAWAII ARMY NATIONAL GUARD
DESIGN AND PROJECT MANAGEMENT BRANCH
STATE OF HAWAII
FACILITY MANAGEMENT OFFICE
BUILDING 117
KALAELOA (FORMER BARBERS POINT NAS), HAWAII
BLDG 117 WINDOW SYSTEM REPLACEMENT - BRAVO 117
STRUCTURAL NOTES AND TYPICAL DETAILS

SCALE: AS NOTED
STATE JOB NO. CA-1425-C
FEDERAL PROJECT NO. 15140059
SHEET 03 OF 35
S-002

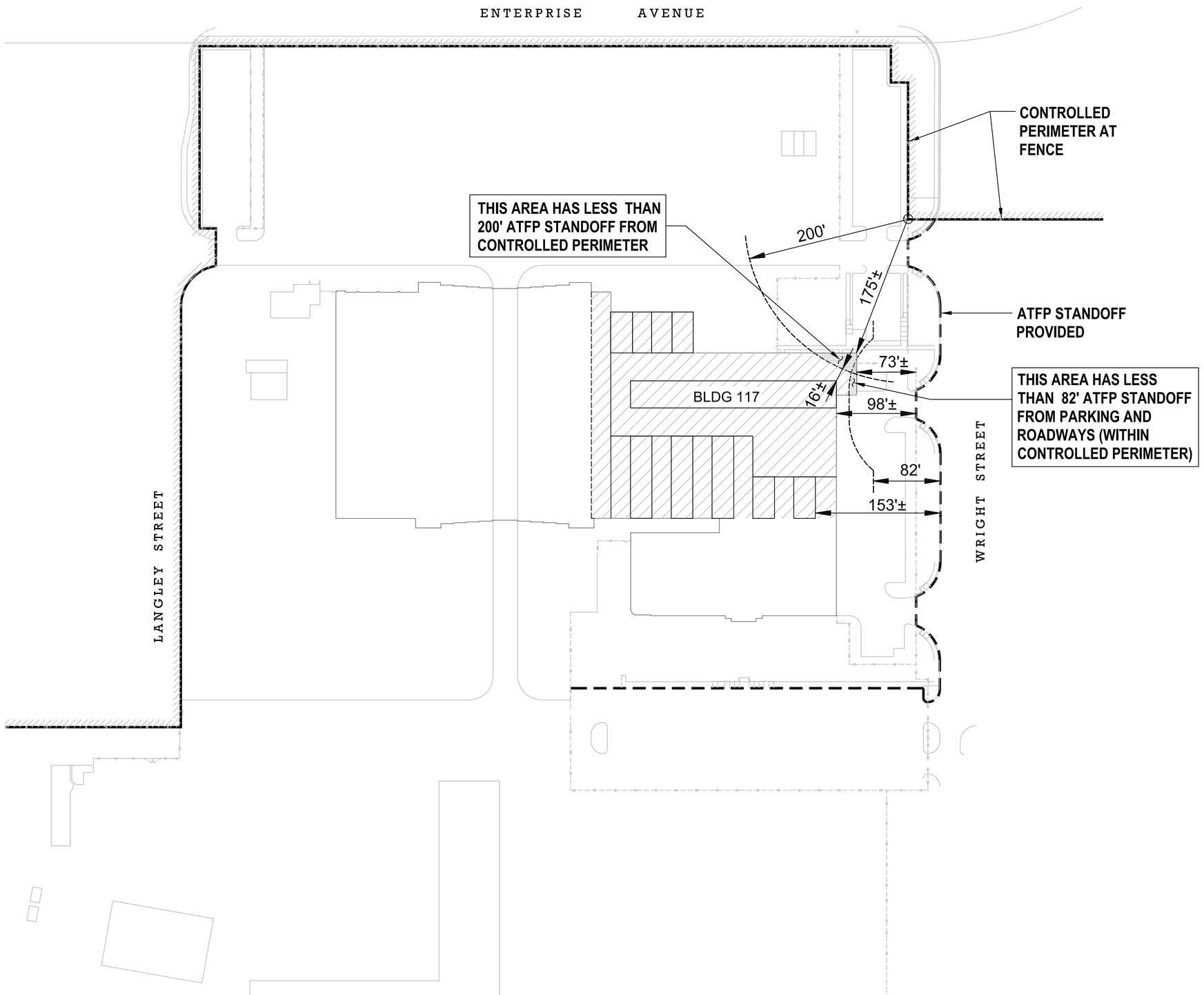

SITE PLAN

SCALE: 1/64" = 1'-0"

0 32' 64' 128'

NOTES:

1. WINDOWS WITHIN 82' STANDOFF FROM PARKING AND ROADWAYS, OR WITHIN 200' STANDOFF FROM CONTROLLED PERIMETER SHALL BE DESIGNED FOR 55 PSF EQUIVALENT STATIC ATFP LOAD PER ASTM E2248 AND ASTM E1300.
2. ALL OTHER WINDOWS SHALL BE DESIGNED FOR 50 PSF EQUIVALENT STATIC ATFP LOAD PER ASTM E2248 AND ASTM E1300.
3. WINDOWS MAY ALSO BE DESIGNED FOR DYNAMIC LOADS AT THE APPLICABLE STANDOFFS PER PDC TR 10-02 AND PDC TR 05-08 OR TESTED PER ASTM F1642.
4. WINDOWS MUST ALSO MEET REQUIREMENTS FOR WINDBORNE DEBRIS RESISTANCE PER ASTM E1996.

HAWAII ARMY NATIONAL GUARD

A/E INFO

GARY CHOCK
LICENSED PROFESSIONAL ENGINEER
No. 5657-S
HAWAII U.S.A.

Expiration Date of the License: 4/30/16

SEAL

STM	DESCRIPTION	DATE	APPR

SUBMITTAL PHASE: FINAL

SUBMITTAL DATE: FEB 17, 2016

DES: LC | DRW: CAD | CHK: LC

DEPARTMENT OF DEFENSE
HAWAII ARMY NATIONAL GUARD
DESIGN AND PROJECT MANAGEMENT BRANCH

STATE OF HAWAII
FACILITY MANAGEMENT OFFICE

BUILDING 117

KALAELOA (FORMER BARBERS POINT NAS), HAWAII

BLDG 117 WINDOW SYSTEM REPLACEMENT - BRAVO 117

STRUCTURAL ATFP SITE PLAN

SCALE: AS NOTED

STATE JOB NO. CA-1425-C

FEDERAL PROJECT NO. 15140059

SHEET 04 OF 35

S-101

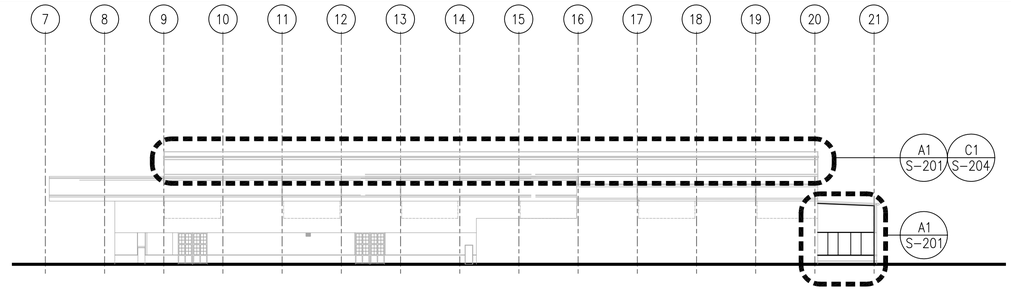

EAST ELEVATION

SCALE: 1/32" = 1'-0"

0 16' 32' 64'

D1

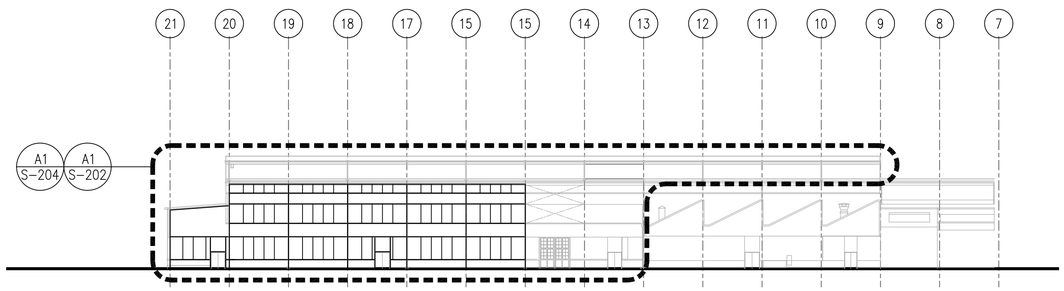

WEST ELEVATION

SCALE: 1/32" = 1'-0"

0 16' 32' 64'

C1

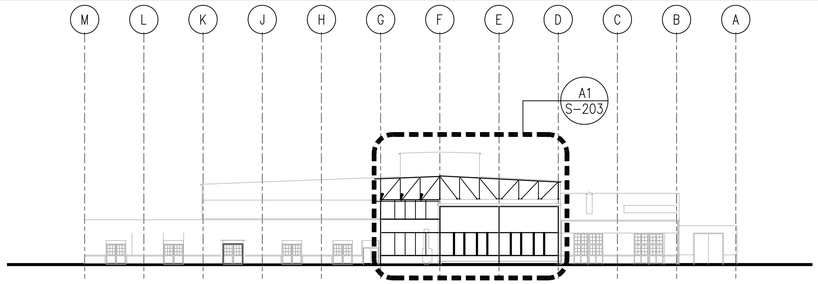

NORTH ELEVATION

SCALE: 1/32" = 1'-0"

0 16' 32' 64'

B1

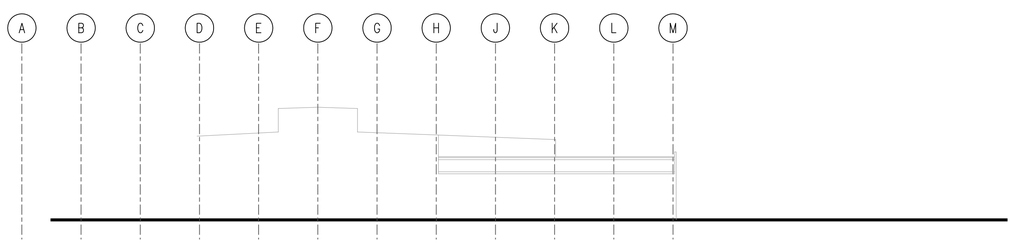

SOUTH ELEVATION - FOR REFERENCE ONLY

SCALE: 1/32" = 1'-0"

0 16' 32' 64'

A1

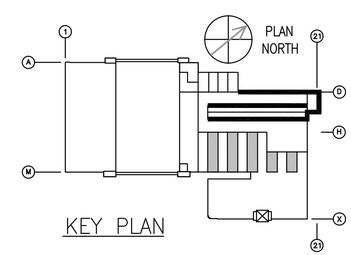

KEY PLAN

A/E INFO

GARY CHOCK
LICENSED PROFESSIONAL ENGINEER
No. 5657-S
HAWAII U.S.A.

Expiration Date of the License: 4/30/16

SEAL

STM	DESCRIPTION	DATE	APPR

SUBMITTAL PHASE: FINAL

SUBMITTAL DATE: FEB 17, 2016

DES: LC DRW: DW CHK: LC

STATE OF HAWAII
FACILITY MANAGEMENT OFFICE

HAWAII ARMY NATIONAL GUARD
DESIGN AND PROJECT MANAGEMENT BRANCH
DEPARTMENT OF DEFENSE

BUILDING 117

KALAELOA (FORMER BARBERS POINT NAS), HAWAII

BLDG 117 WINDOW SYSTEM REPLACEMENT - BRAVO 117

OVERALL EXTERIOR ELEVATIONS

SCALE: AS NOTED

STATE JOB NO. CA-1425-C

FEDERAL PROJECT NO. 15140059

SHEET 05 OF 35

S-200

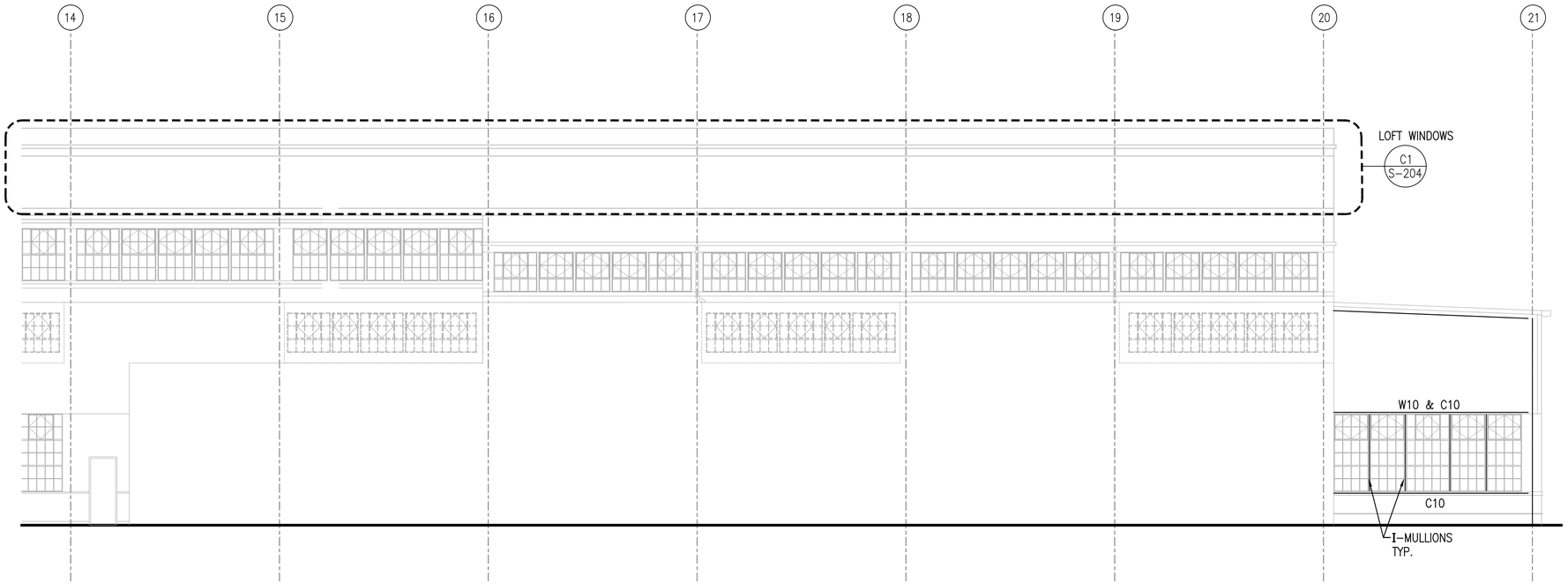

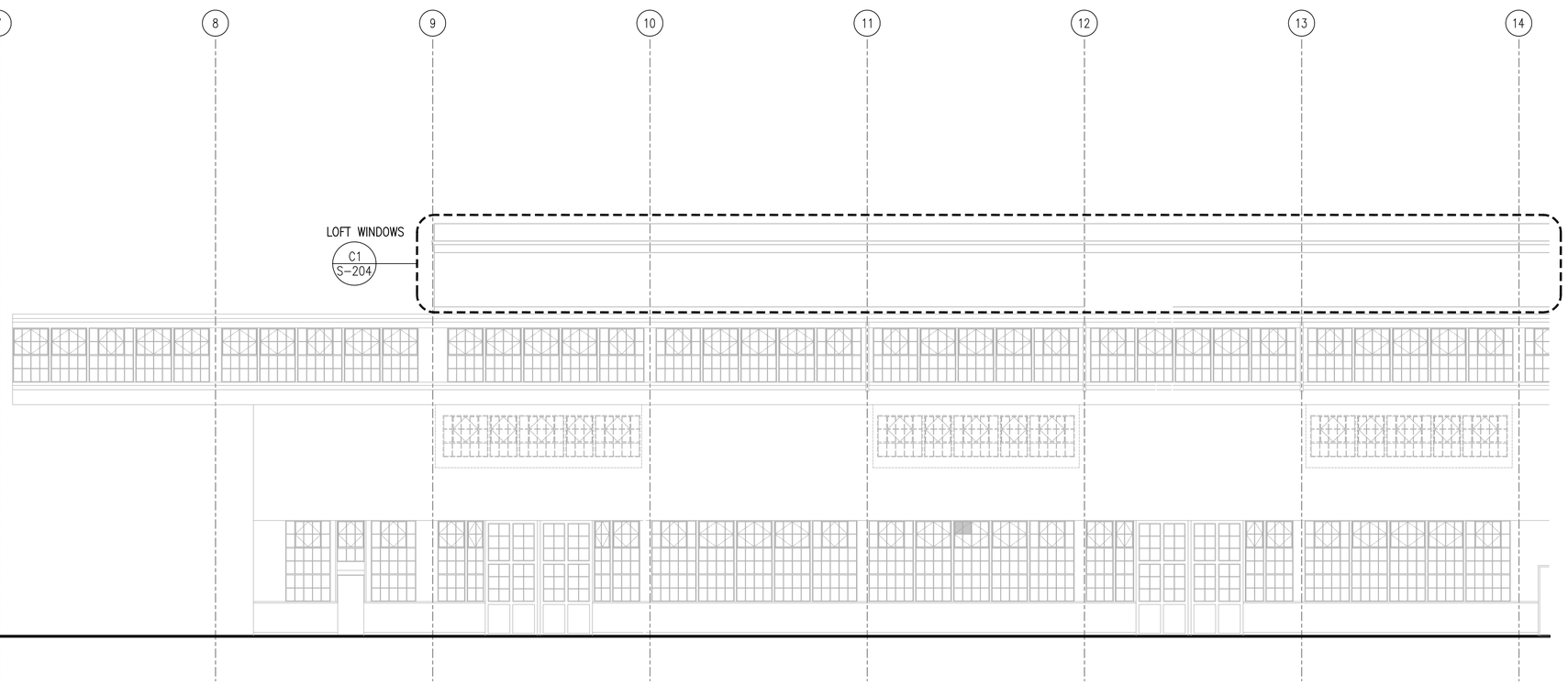

PARTIAL EAST ELEVATIONS

SCALE: 1/8" = 1'-0"

0 4' 8' 16'

S-200 A1

LEGEND

GENERAL NOTES

1. FRAMING IS EXISTING UNLESS OTHER NOTED AS NEW (N).
2. REPLACE EXISTING STEEL ONLY WHERE INDICATED.
3. MODIFY CONNECTION OF (E)STRUCTURAL MULLIONS WHERE THERE IS NO CONNECTION BETWEEN THE MULLION WEB AND SUPPORTING HEADER OR SILL. FOR DETAILS SEE D3/S-501.
4. BRACE EXTERIOR TRUSS BOTTOM FLANGES WHERE SHOWN. FOR DETAILS SEE A2/S-502.
5. FOR CONNECTIONS TO STRUCTURAL SUPPORTS AT NEW AND REFURBISHED STEEL LADDERS, SEE DETAIL A3/S-502. FOR LADDER LOCATIONS, QUANTITIES, AND ADDITIONAL INFORMATION, SEE ARCHITECTURAL DRAWINGS.

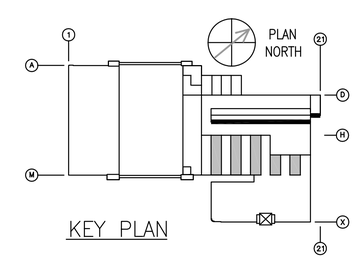

KEY PLAN

A/E INFO

GARY CHOCK
LICENSED PROFESSIONAL ENGINEER
No. 5657-S
HAWAII, U.S.A.

Expiration Date of the License: 4/30/16

SEAL

SYM	DESCRIPTION	DATE	APPR

SUBMITTAL PHASE: FINAL

SUBMITTAL DATE: FEB 17, 2016

DES LC | DRW CAD | CHK LC

DEPARTMENT OF DEFENSE
HAWAII ARMY NATIONAL GUARD
DESIGN AND PROJECT MANAGEMENT BRANCH

STATE OF HAWAII
FACILITY MANAGEMENT OFFICE

BUILDING 117
KALAELOA (FORMER BARBERS POINT NAS), HAWAII
BLDG 117 WINDOW SYSTEM REPLACEMENT - BRAVO 117

PARTIAL EAST FRAMING ELEVATIONS

SCALE: AS NOTED

STATE JOB NO. CA-1425-C

FEDERAL PROJECT NO. 15140059

SHEET 06 OF 35

S-201

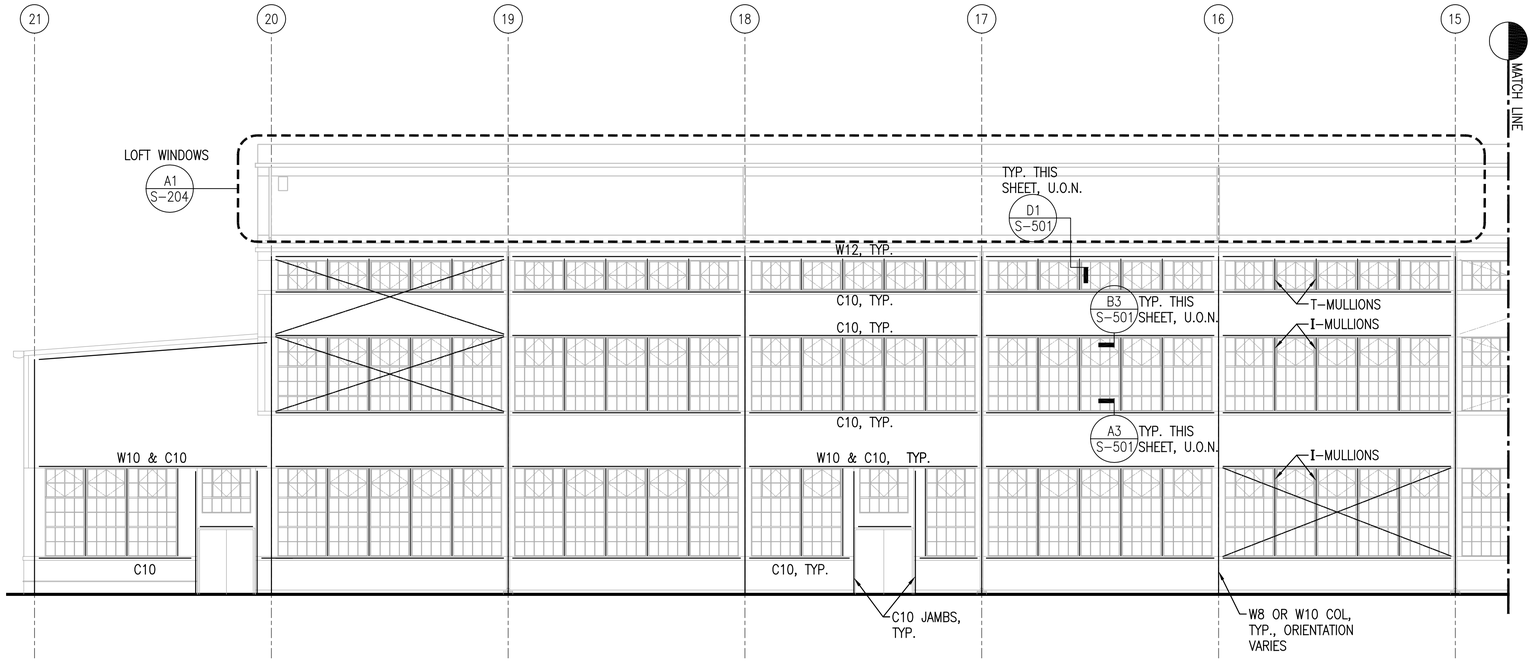

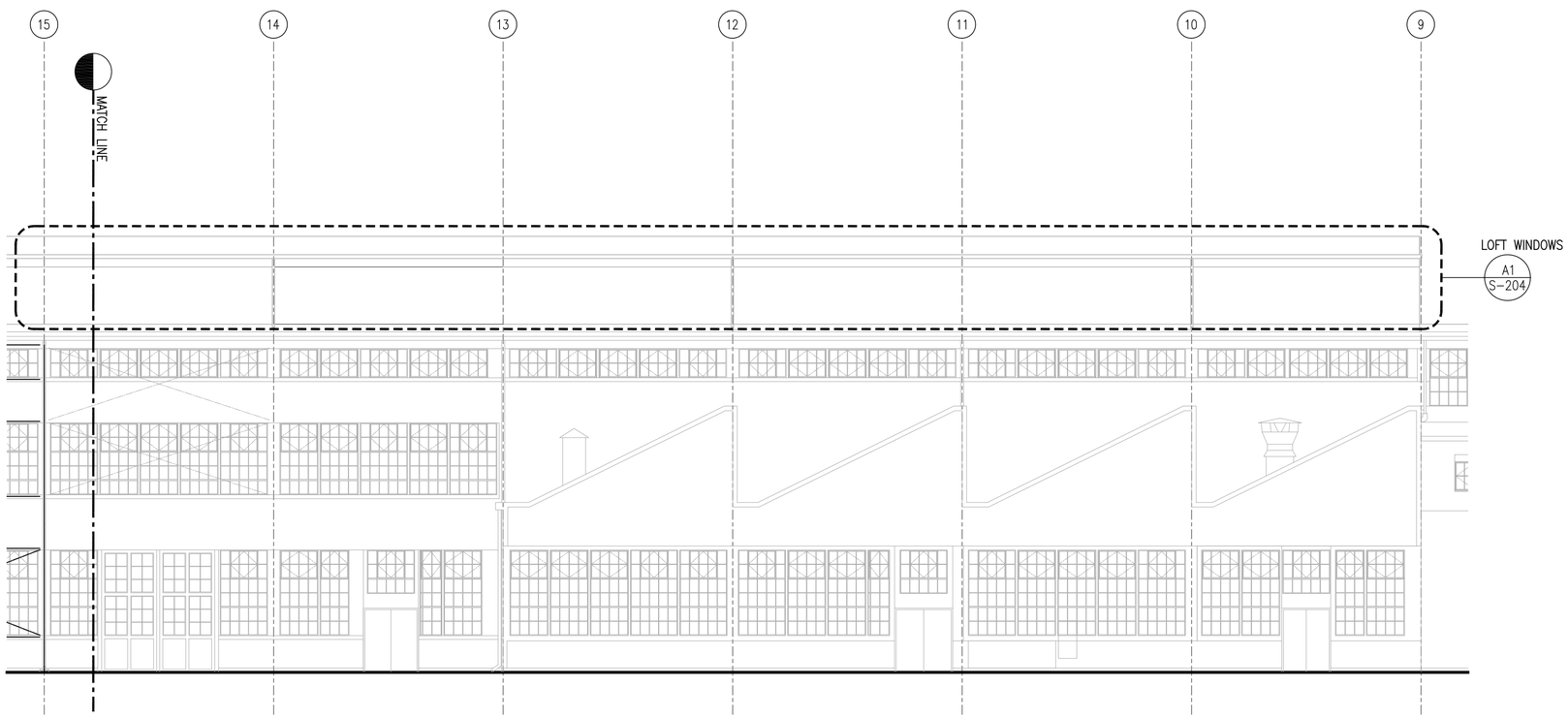

PARTIAL WEST ELEVATIONS

SCALE: 1/8" = 1'-0"

0 4' 8' 16'

S-200 A1

LEGEND

GENERAL NOTES

1. FRAMING IS EXISTING UNLESS OTHER NOTED AS NEW (N).
2. REPLACE EXISTING STEEL ONLY WHERE INDICATED.
3. MODIFY CONNECTION OF (E)STRUCTURAL MULLIONS WHERE THERE IS NO CONNECTION BETWEEN THE MULLION WEB AND SUPPORTING HEADER OR SILL. FOR DETAILS SEE D3/S-501.
4. BRACE EXTERIOR TRUSS BOTTOM FLANGES WHERE SHOWN. FOR DETAILS SEE A2/S-502.
5. FOR CONNECTIONS TO STRUCTURAL SUPPORTS AT NEW AND REFURBISHED STEEL LADDERS, SEE DETAIL A3/S-502. FOR LADDER LOCATIONS, QUANTITIES, AND ADDITIONAL INFORMATION, SEE ARCHITECTURAL DRAWINGS.

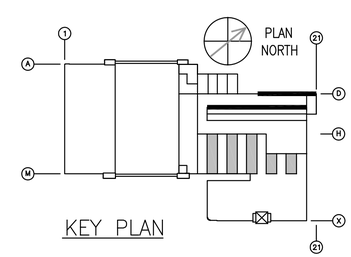

KEY PLAN

A/E INFO

GARY CHOCK
LICENSED PROFESSIONAL ENGINEER
No. 5657-S
HAWAII, U.S.A.
Expiration Date of the License: 4/30/16
SEAL

SYM	DESCRIPTION	DATE	APPR

SUBMITTAL PHASE
FINAL

SUBMITTAL DATE FEB 17, 2016

DES LC | DRW CAD | CHK LC

DEPARTMENT OF DEFENSE
HAWAII ARMY NATIONAL GUARD
DESIGN AND PROJECT MANAGEMENT BRANCH
STATE OF HAWAII
FACILITY MANAGEMENT OFFICE
BUILDING 117
KALAELOA (FORMER BARBERS POINT NAS), HAWAII
BLDG 117 WINDOW SYSTEM REPLACEMENT - BRAVO 117
PARTIAL WEST FRAMING ELEVATIONS

SCALE: AS NOTED

STATE JOB NO. CA-1425-C

FEDERAL PROJECT NO. 15140059

SHEET 07 OF 35

S-202

LEGEND

GENERAL NOTES

1. FRAMING IS EXISTING UNLESS OTHER NOTED AS NEW (N).
2. REPLACE EXISTING STEEL ONLY WHERE INDICATED.
3. MODIFY CONNECTION OF (E)STRUCTURAL MULLIONS WHERE THERE IS NO CONNECTION BETWEEN THE MULLION WEB AND SUPPORTING HEADER OR SILL. FOR DETAILS SEE D3/S-501.
4. BRACE EXTERIOR TRUSS BOTTOM FLANGES WHERE SHOWN. FOR DETAILS SEE A2/S-502.
5. FOR CONNECTIONS TO STRUCTURAL SUPPORTS AT NEW AND REFURBISHED STEEL LADDERS, SEE DETAIL A3/S-502. FOR LADDER LOCATIONS, QUANTITIES, AND ADDITIONAL INFORMATION, SEE ARCHITECTURAL DRAWINGS.

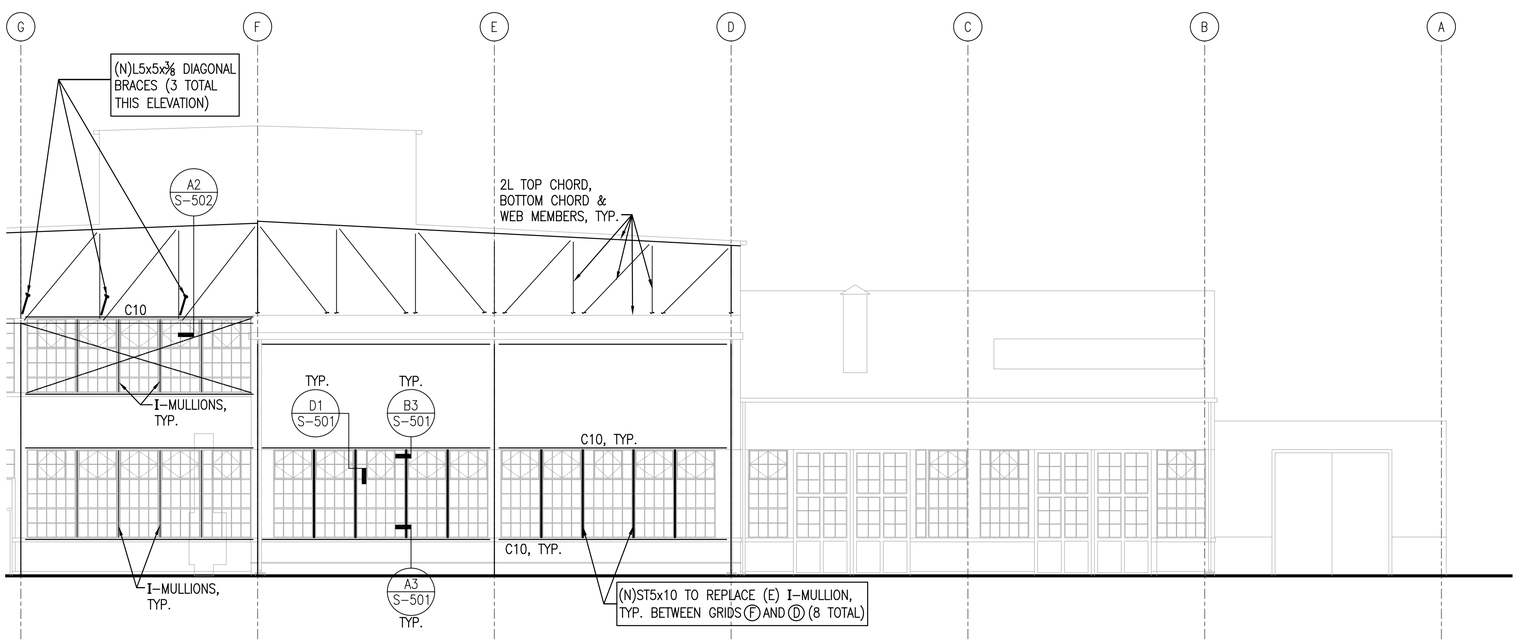

PARTIAL NORTH ELEVATIONS

SCALE: 1/8" = 1'-0"

0 4' 8' 16'

S-200 A1

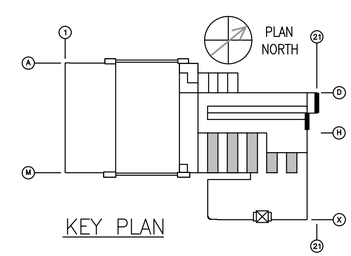

KEY PLAN

A/E INFO

GARY CHOCK
LICENSED PROFESSIONAL ENGINEER
No. 5657-S
HAWAII, U.S.A.

Expiration Date of the License: 4/30/16

SEAL

SYM	DESCRIPTION	DATE	APPR

SUBMITTAL PHASE: FINAL

SUBMITTAL DATE: FEB 17, 2016

DES: LC | DRW: CAD | CHK: LC

DEPARTMENT OF DEFENSE
HAWAII ARMY NATIONAL GUARD
DESIGN AND PROJECT MANAGEMENT BRANCH
STATE OF HAWAII
FACILITY MANAGEMENT OFFICE

KALAELOA (FORMER BARBERS POINT NAS), HAWAII

BUILDING 117

BLDG 117 WINDOW SYSTEM REPLACEMENT - BRAVO 117

PARTIAL NORTH FRAMING ELEVATIONS

SCALE: AS NOTED

STATE JOB NO. CA-1425-C

FEDERAL PROJECT NO. 15140059

SHEET 08 OF 35

S-203

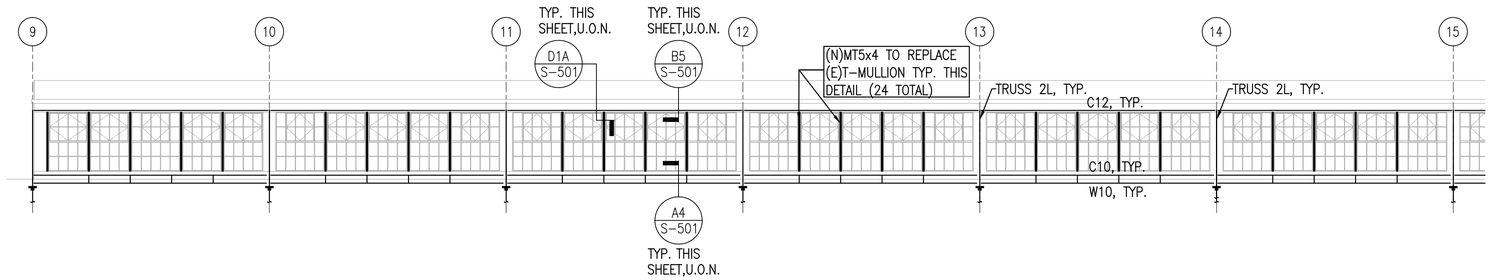

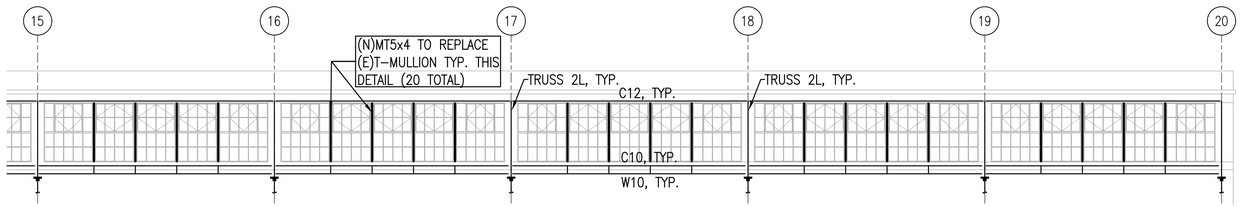

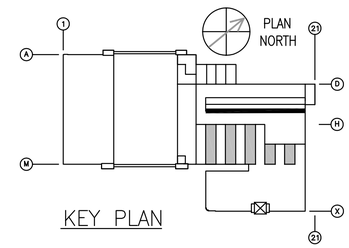

PARTIAL EAST ELEVATION (UPPER LOFT WINDOWS)

SCALE: 1/8" = 1'-0"

0 4' 8' 16'

S-200, S-201 C1

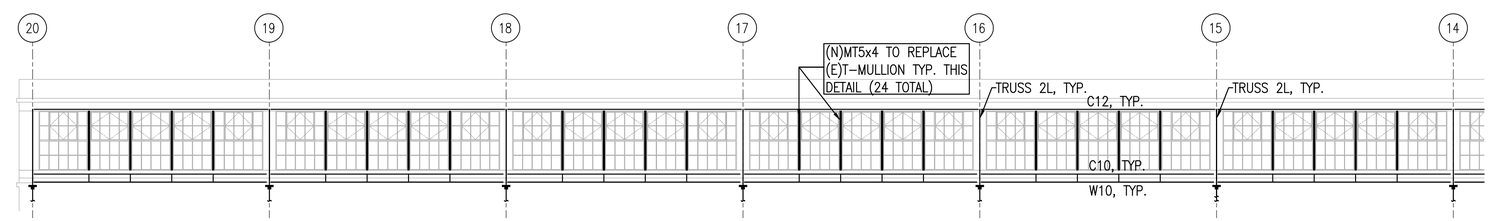

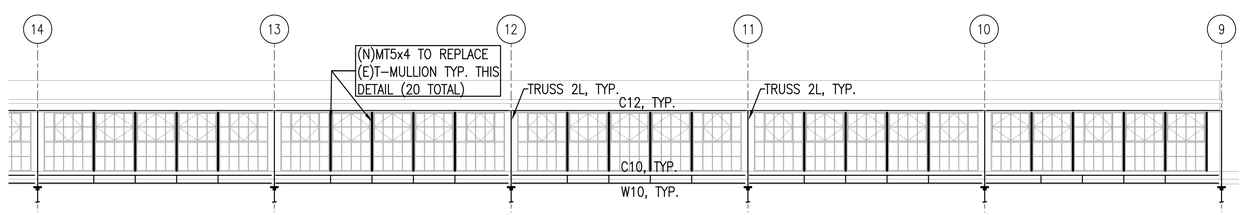

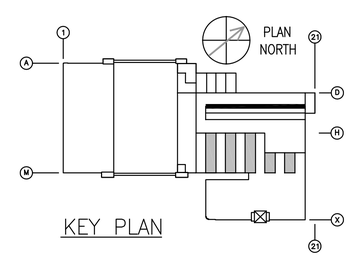

PARTIAL WEST ELEVATION (UPPER LOFT WINDOWS)

SCALE: 1/8" = 1'-0"

0 4' 8' 16'

S-200, S-202 A1

LEGEND

GENERAL NOTES

1. FRAMING IS EXISTING UNLESS OTHER NOTED AS NEW (N).
2. REPLACE EXISTING STEEL ONLY WHERE INDICATED.
3. MODIFY CONNECTION OF (E)STRUCTURAL MULLIONS WHERE THERE IS NO CONNECTION BETWEEN THE MULLION WEB AND SUPPORTING HEADER OR SILL. FOR DETAILS SEE D3/S-501.
4. BRACE EXTERIOR TRUSS BOTTOM FLANGES WHERE SHOWN. FOR DETAILS SEE A2/S-502.
5. FOR CONNECTIONS TO STRUCTURAL SUPPORTS AT NEW AND REFURBISHED STEEL LADDERS, SEE DETAIL A3/S-502. FOR LADDER LOCATIONS, QUANTITIES, AND ADDITIONAL INFORMATION, SEE ARCHITECTURAL DRAWINGS.

HAWAII ARMY NATIONAL GUARD

A/E INFO

GARY CHOCK
LICENSED PROFESSIONAL ENGINEER
No. 5657-S
HAWAII, U.S.A.
Expiration Date of the License: 4/30/16
SEAL

SYM	DESCRIPTION	DATE	APPR

SUBMITTAL PHASE: FINAL

SUBMITTAL DATE: FEB 17, 2016

DES: LC | DRW: CAD | CHK: LC

STATE OF HAWAII
FACILITY MANAGEMENT OFFICE

DEPARTMENT OF DEFENSE
HAWAII ARMY NATIONAL GUARD
DESIGN AND PROJECT MANAGEMENT BRANCH

BUILDING 117
KALAELOA (FORMER BARBERS POINT NAS), HAWAII
BLDG 117 WINDOW SYSTEM REPLACEMENT - BRAVO 117

PARTIAL EAST &WEST FRAMING ELEVATIONS
UPPER LOFT WINDOWS

SCALE: AS NOTED

STATE JOB NO. CA-1425-C

FEDERAL PROJECT NO. 15140059

SHEET 09 OF 35

S-204

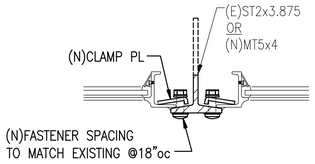

(A) (E)ST OR MT MULLION WITH CLAMPED CONNECTIONS

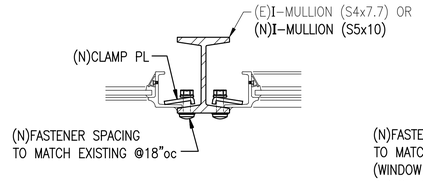

(B) (E)OR(N) I-MULLION WITH CLAMPED CONNECTIONS

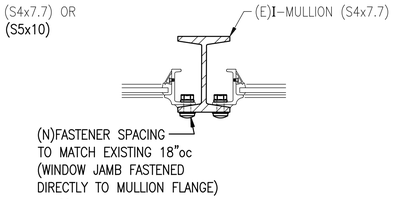

(C) (E) I-MULLION WITH CLAMPED CONNECTIONS

NOTE:
FOR TOP AND BOTTOM CONNECTION
TO HEAD OR SILL ANGLE, SEE DETAIL D3/S-501

TYPICAL MULLION / JAMB DETAILS

3" = 1' – 0" 0 3" 6" 9"

S-202, S-203. S-204 (D1)

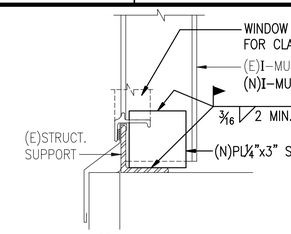

(A) (E)OR(N) I-MULLION

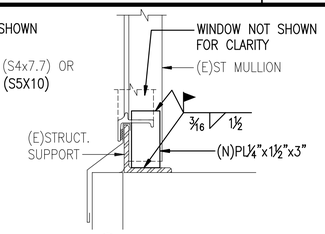

(B) (E)ST MULLION

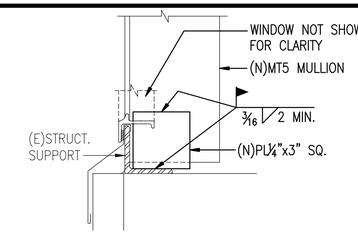

(B) (N)MT5 MULLION

NOTES:
1. SILL CONDITION SHOWN; HEADER CONDITION SIMILAR.
2. WHERE EXISTING MULLION IS CONNECTED DIRECTLY TO CONCRETE, SEE DETAIL C1/S-502(SIM.).

TYP. DETAIL AT MULLION HEAD & SILL

3" = 1' – 0" 0 3" 6" 9"

S-201, S-202, S-203, S-204 (D3)

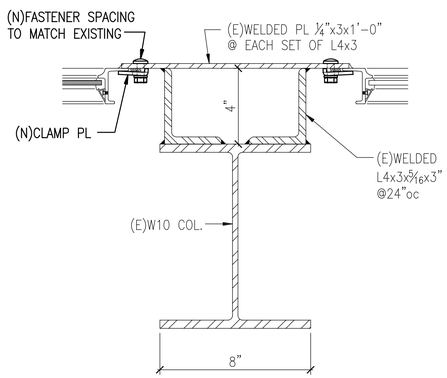

TYP. JAMB DETAIL AT (E)W10 COLUMN

3" = 1' – 0" 0 3" 6" 9"

(B1)

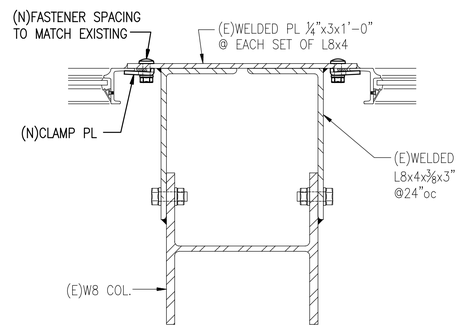

TYP. JAMB DETAIL AT W8 COLUMN

3" = 1' – 0" 0 3" 6" 9"

(B2)

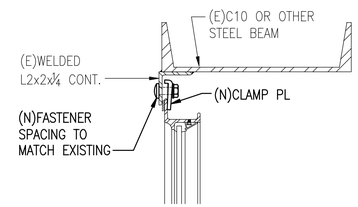

NOTE:
ADDITIONAL FRAMING (WHERE OCCURS)
NOT SHOWN

TYPICAL HEAD DETAIL AT (E)C10 HEADER

3" = 1' – 0" 0 3" 6" 9"

S-202, S-203 (B3)

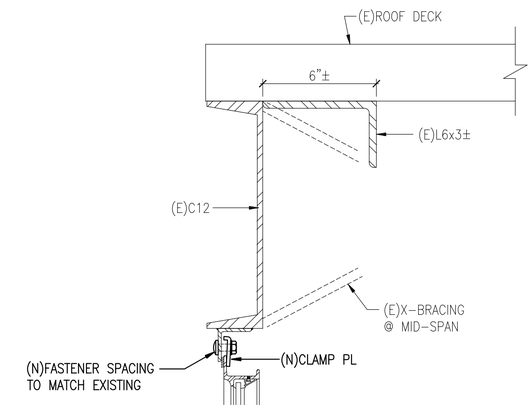

HEAD DETAIL AT LOFT/CLERESTORY

3" = 1' – 0" 0 3" 6" 9"

S-204 (B5)

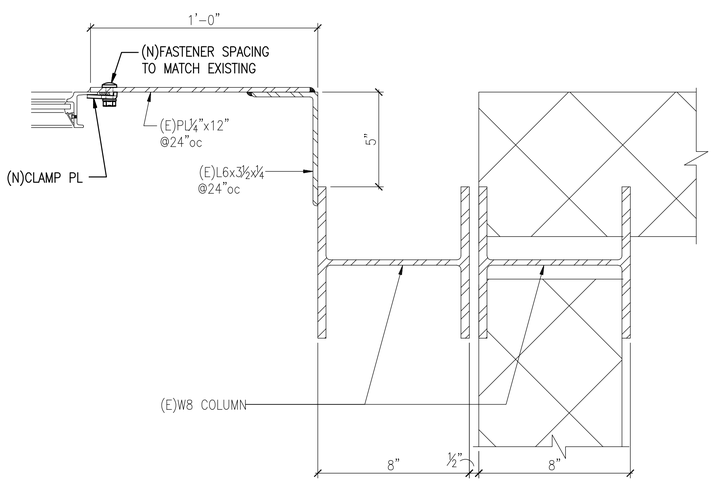

JAMB DETAIL AT W8 COLUMN AT GRID M

3" = 1' – 0" 0 3" 6" 9"

(A1)

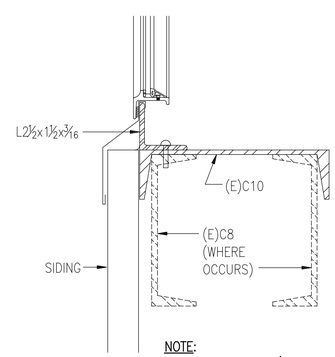

NOTE:
CMU WALL BELOW (WHERE OCCURS)
NOT SHOWN

TYPICAL SILL DETAIL AT (E)C10 CHANNEL SILL

3" = 1' – 0" 0 3" 6" 9"

S-202, S-203 (A3)

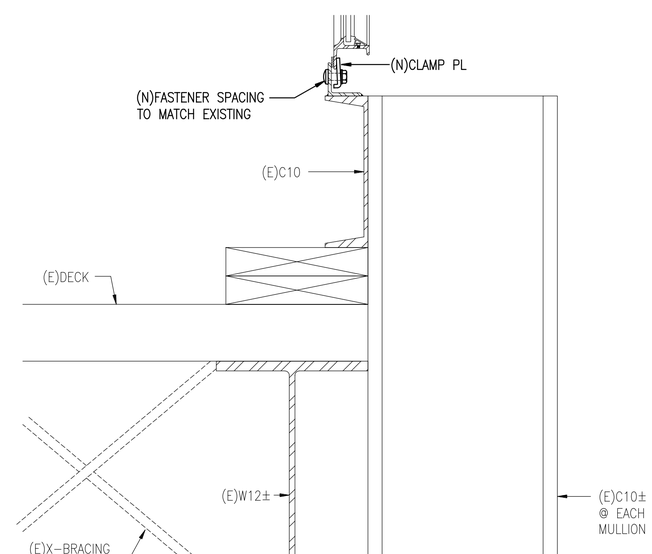

SILL DETAIL AT LOFT

3" = 1' – 0" 0 3" 6" 9"

S-204 (A4)

A/E INFO

GARY CHOCK
LICENSED PROFESSIONAL ENGINEER
No. 5657-S
HAWAII, U.S.A.
Expiration Date of the License: 4/30/16
SEAL

SYM	DESCRIPTION	DATE	APPR

SUBMITTAL PHASE: FINAL

SUBMITTAL DATE: FEB 17, 2016

DES LC | DRW CAD | CHK LC

DEPARTMENT OF DEFENSE
HAWAII ARMY NATIONAL GUARD
DESIGN AND PROJECT MANAGEMENT BRANCH
STATE OF HAWAII
FACILITY MANAGEMENT OFFICE
KALAELOA (FORMER BARBERS POINT NAS), HAWAII
BUILDING 117
BLDG 117 WINDOW SYSTEM REPLACEMENT - BRAVO 117
WINDOW DETAILS

SCALE: AS NOTED

STATE JOB NO. CA-1425-C

FEDERAL PROJECT NO. 15140059

SHEET 10 OF 35

S-501

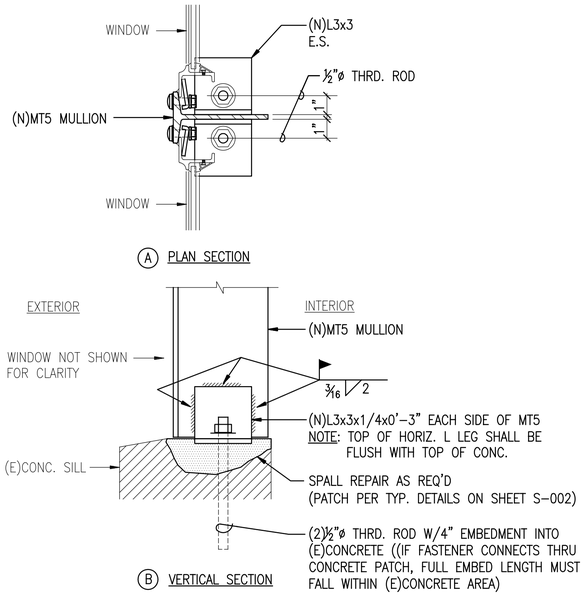

SILL CONNECTION TO CONCRETE — C1

3" = 1' - 0"

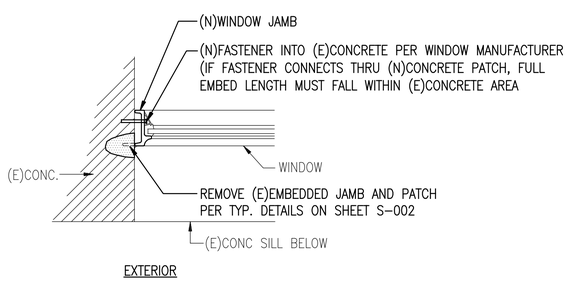

JAMB CONNECTION TO CONCRETE — B1

3" = 1' - 0"

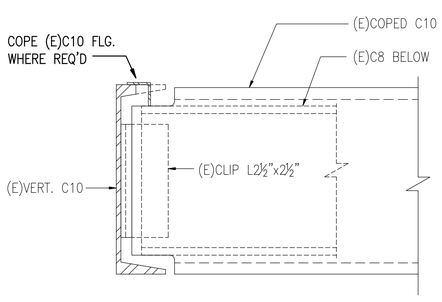

JAMB TO SILL CONN. AT (E)C10 JAMB — A1

3" = 1' - 0"

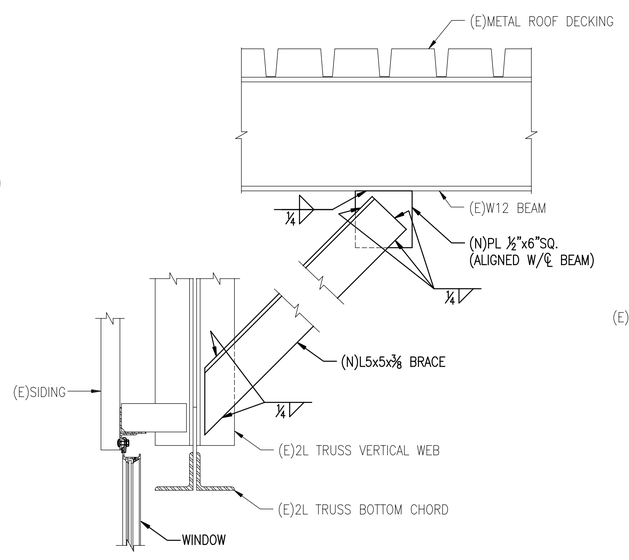

STEEL BRACE AT TRUSSES — A2

1 1/2" = 1' - 0" S-201, S-202, S-203, S-204

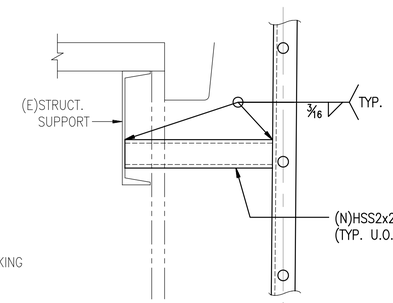

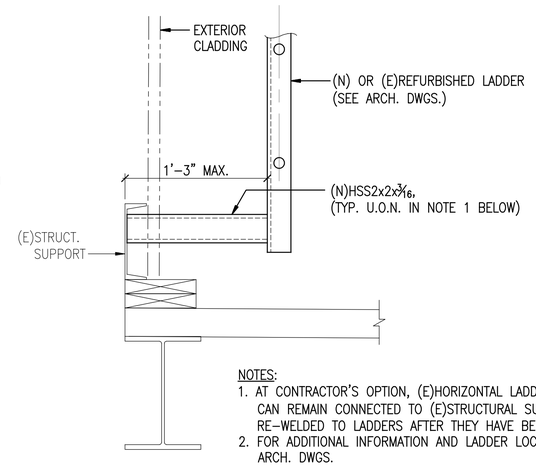

NOTES:
1. AT CONTRACTOR'S OPTION, (E)HORIZONTAL LADDER SUPPORTS CAN REMAIN CONNECTED TO (E)STRUCTURAL SUPPORTS AND BE RE-WELDED TO LADDERS AFTER THEY HAVE BEEN REFURBISHED.
2. FOR ADDITIONAL INFORMATION AND LADDER LOCATIONS, SEE ARCH. DWGS.

SUPPORT FRAMING FOR STEEL ROOF LADDERS — A3

1 1/2" = 1' - 0" S-201, S-202, S-203, S-204

A/E INFO

GARY CHOCK
LICENSED PROFESSIONAL ENGINEER
No. 5657-S
HAWAII U.S.A.
Expiration Date of the License: 4/30/16
SEAL

SYM	DESCRIPTION	DATE	APPR

SUBMITTAL PHASE: FINAL
SUBMITTAL DATE: FEB 17, 2016
DES LC | DRW CAD | CHK LC

STATE OF HAWAII
FACILITY MANAGEMENT OFFICE
DEPARTMENT OF DEFENSE
DESIGN AND PROJECT MANAGEMENT BRANCH
HAWAII ARMY NATIONAL GUARD
KALAELOA (FORMER BARBERS POINT NAS), HAWAII
BUILDING 117
BLDG 117 WINDOW SYSTEM REPLACEMENT - BRAVO 117
WINDOW DETAILS

SCALE: AS NOTED
STATE JOB NO. CA-1425-C
FEDERAL PROJECT NO. 15140059
SHEET 11 OF 35
S-502

ABBREVIATIONS

AB	ANCHOR BOLT
AC	ASPHALTIC CONCRETE
A/C	AIR CONDITIONING
ACC	ACCESSIBLE
ACOUS	ACOUSTIC
AD	AREA DRAIN
ADJ	ADJUSTABLE; ADJACENT
AGGR	AGGREGATE
ALUM	ALUMINUM
ALT	ALTERNATE
APPROX	APPROXIMATE
ARCH	ARCHITECTURAL
ASB	ASBESTOS
ASPH	ASPHALT
BD	BOARD
BLDG	BUILDING
BM	BEAM
BOT	BOTTOM
BRKT	BRACKET
BUR	BUILT UP ROOFING
CAB	CABINET
CBB	CEMENTITIOUS BACKER BOARD
CEM	CEMENT
CER	CERAMIC
CI	CAST IRON
CLG	CEILING
CLO	CLOSET
CLR	CLEAR
CMU	CONCRETE MASONRY UNIT
CNTR	COUNTER
CO	CLEANOUT
COND	CONDITION
COL	COLUMN
CONC	CONCRETE
CONN	CONNECT
CONSTR	CONSTRUCTION
CONT	CONTINUOUS
CONTR	CONTRACTOR
CORR	CORRIDOR
CT	CERAMIC TILE
CTR	CENTER
CSK	COUNTER SUNK
D	DEEP, DEPTH
DBL	DOUBLE
DEMO	DEMOLITION
DEPT	DEPARTMENT
DET	DETAIL
DIA	DIAMETER
DIM	DIMENSION
DISP	DISPENSER
DR	DOOR
DS	DOWNSPOUT
DSP	DRY STANDPIPE
DWG	DRAWING
DWR	DRAWER
E	EXISTING
EA	EACH
EJ	EXPANSION JOINT
EL	ELEVATION
ELEC	ELECTRICAL
EMER	EMERGENCY
ENCL	ENCLOSURE
EP	ELECTRICAL PANELBOARD
EPS	EXPANDED POLYSTYRENE BOARD
EQ	EQUAL
EQUIP	EQUIPMENT
EWC	ELECTRIC WATER COOLER
EXP	EXPANSION; EXPOSED
EXIST	EXISTING
EXT	EXTERIOR
FA	FIRE ALARM
FB	FLAT BAR
FD	FLOOR DRAIN
FDN	FOUNDATION
FE	FIRE EXTINGUISHER
FEC	FIRE EXTINGUISHER CABINET
FHC	FIRE HOSE CABINET
FIN	FINISH
FIXT	FIXTURE
FLR	FLOOR
FLASH	FLASHING
FLUOR	FLUORESCENT
FOC	FACE OF CONCRETE
FOF	FACE OF FINISH
FOS	FACE OF STUD
FP	FIRE PROTECTION
FR	FRAME
FS	FULL SIZE
FT	FOOT OR FEET
FTG	FOOTING
FURG	FURRING
FUT	FUTURE
G	GROUND
GA	GAGE
GALV	GALVANIZED
GB	GRAB BAR
GI	GALVANIZED IRON
GL	GLASS
GLZ	GLAZING
GYP	GYPSUM
H	HIGH
HB	HOSE BIBB
HC	HOLLOW CORE
HDPE	HIGH DENSITY POLYETHYLENE
HDWD	HARDWOOD
HDW	HARDWARE
HHMB	HEX HEAD MACHINE BOLT
HM	HOLLOW METAL
HORIZ	HORIZONTAL
HT	HEIGHT
ID	INSIDE DIAMETER
INCL	INCLUDED
INFO	INFORMATION
INSUL	INSULATION
INT	INTERIOR
JAL	JALOUSIE
JAN	JANITOR
KIT	KITCHEN
KOP	KNOCK OUT PANEL
LAM	LAMINATE
LAV	LAVATORY
LF	LINEAR FEET
LR	LIVING ROOM
LT	LIGHT
MACH	MACHINE
MAX	MAXIMUM
MC	MEDICINE CABINET
MECH	MECHANICAL
MEMB	MEMBRANE
MT	MOUNT
MTL	METAL
MFR	MANUFACTURER
MH	MANHOLE
MIN	MINIMUM
MIRR	MIRROR
MISC	MISCELLANEOUS
MO	MASONRY OPENING
MTD	MOUNTED
MTG	MOUNTING
MULL	MULLION
MOPR	MOP RACK
N	NORTH
NIC	NOT IN CONTRACT
NO or #	NUMBER
NOM	NOMINAL
NTS	NOT TO SCALE
OA	OVERALL
OGL	OBSCURE GLASS
OC	ON CENTER
OD	OUTSIDE DIAMETER (DIM)
OF/CI	OWNER FURNISHED/ CONTRACTOR INSTALLED
OF/OI	OWNER FURNISHED/ OWNER INSTALLED
OFF	OFFICE
OH	OVERHANG
OPNG	OPENING
OPP	OPPOSITE
PC	PIECE
PL GL	PLATE GLASS
PLAM	PLASTIC LAMINATE
PLAS	PLASTER
PLBG	PLUMBING
PLYWD	PLYWOOD
PNL	PANEL
PR	PAIR
PRCST	PRECAST
PTDR	PAPER TOWEL DISPENSER AND RECEPTACLE
PTN	PARTITION
QT	QUARRY TILE
QTR	QUARTER
R	RADIUS; RISER
RD	ROOF DRAIN
RECPT	RECEPTACLE
REF	REFRIGERATOR; REFERENCE
REINF	REINFORCE
REQD	REQUIRED
RESIL	RESILIENT
REG	REGISTER
RM	ROOM
RND	ROUND
RO	ROUGH OPENING
RWD	REDWOOD
RWL	RAIN WATER LEADER
S	SOUTH
SC	SOLID CORE
SCD	SEAT COVER DISPENSER
SCHED	SCHEDULE
SCRN	SCREEN
SD	SOAP DISPENSER
SECT	SECTION
SHV	SHELVING
SHR	SHOWER
SHT	SHEET
SIM	SIMILAR
SLNT	SEALANT
SLDG	SLIDING
SND	SANITARY NAPKIN DISPENSER
SNDU	SANITARY NAPKIN DISPOSAL UNIT
SWR	SEWER
SPEC	SPECIFICATION
SQ	SQUARE
SST	STAINLESS STEEL
SS	SERVICE SINK
STA	STATION
STC	SOUND TRANSMISSION CLASS
STD	STANDARD
STL	STEEL
STOR	STORAGE
STRUCT	STRUCTURAL
SURR	SURROUND
SUSP	SUSPENDED
SYMM	SYMMETRICAL
T	TREAD
TB	TOWEL BAR
TC	TOP OF CURB
TEL	TELEPHONE
TMPD	TEMPERED
TER	TERRAZZO
T&G	TONGUE AND GROOVE
THK	THICKNESS
THRES	THRESHOLD
TOP	TOP OF PAVEMENT
TPD	TOILET PAPER DISPENSER
TPH	TOILET PAPER HOLDER
TOW	TOP OF WALL
TSCD	TOILET SEAT COVER DISPENSER
TYP	TYPICAL
UBC	UNIFORM BUILDING CODE
UNO	UNLESS NOTED OTHERWISE
UL	UNDERWRITERS LABORATORY
VCT	VINYL COMPOSITION TILE
VIF	VERIFY IN FIELD
VTR	VENT THRU ROOF
VERT	VERTICAL
VEST	VESTIBULE
W	WEST
W/	WITH
WC	WATER CLOSET
WD	WOOD
WDW	WINDOW
WH	WATER HEATER
W/O	WITHOUT
WO	WHERE OCCURS
WP	WATERPROOFING
WPM	WATERPROOFING MEMBRANE
WR	WATER REPELLENT
WSCT	WAINSCOT
WT	WEIGHT
WWM	WELDED WIRE MESH

GENERAL NOTES

1. TYPICAL MATERIAL INDICATIONS ON INTERIOR ELEVATIONS ARE CALLED OUT ON ELEVATION 'A'. TYPICAL MATERIAL INDICATIONS ON EXTERIOR ELEVATIONS ARE CALLED OUT ON THE FRONT ELEVATION.
2. ALL ITEMS & MATERIALS NOTED WITHIN THESE DRAWINGS ARE NEW UNLESS INDICATED OTHERWISE.
3. COMPLY WITH THE LATEST CITY, STATE, AND FEDERAL LAWS, BUILDING CODES, THEIR ADDITIONS, ADDENDA, AND AMENDMENTS IN THE CONSTRUCTION OF THIS PROJECT.
4. REPAIR ALL DAMAGE CAUSED BY CONSTRUCTION OF THIS PROJECT. AT NO ADDITIONAL COST TO THE OWNER.
5. USE DIMENSIONS NOTED ON DRAWINGS ONLY, DO NOT SCALE DIMENSIONS FROM THE DRAWINGS.
6. REFERENCE THE MARCH 17, 2015 HAZARDOUS MATERIALS REPORT BY EMET (LIMITED ASBESTOS AND LEAD PAINT SURVEY REPORT) AS A GUIDE FOR THE ABATEMENT OF HAZARDOUS MATERIALS DURING THE DEMOLITION AND CONSTRUCTION OF THIS PROJECT.
7. DIMENSIONS FOR EXISTING WALLS ARE TAKEN FROM FINISHED FACE. DIMENSIONS FOR NEW WALLS ARE TAKEN FROM THE OUTER FACE OF THE STUD. SHEAR WALL DIMENSIONS ARE TAKEN FROM THE OUTER FACE OF THE CONCRETE UNLESS OTHERWISE NOTED.
8. ALL WORK SHALL BE IN ACCORDANCE WITH THE SECRETARY OF THE INTERIOR'S STANDARDS AND GUIDELINES FOR REHABILITATION.

MATERIALS

- EXISTING EARTH
- FILL EARTH
- CONCRETE
- GRANULAR TERMITE BARRIER
- CAPILLARY WATER BARRIER
- CONCRETE MASONRY UNITS (PLAN)
- CONCRETE MASONRY UNITS (SECTION)
- ACOUSTIC CEILING TILE
- GYPSUM WALL BOARD
- PLYWOOD
- RIGID INSULATION
- MINERAL FIBER INSULATION
- GLASS (IN SECTION)
- GLASS (IN ELEVATION)
- METAL STUD PARTITION
- WOOD (ROUGH)
- WOOD (FINISH)
- BLANKET INSULATION
- PERIMETER INSULATION
- METAL

HAWAII ARMY NATIONAL GUARD

A/E INFO

I CERTIFY THAT THIS DRAWING WAS PREPARED BY ME OR UNDER MY DIRECT SUPERVISION.

BARBARA S. SHIDELER LICENSED PROFESSIONAL No. 7760 HAWAII, U.S.A.

EXPIRES APRIL 30, 2016 SEAL

SYM	DESCRIPTION	DATE	APPR

SUBMITTAL PHASE: FINAL

SUBMITTAL DATE: FEB 17, 2016

DES MYW | DRW MYW | CHK BSS

STATE OF HAWAII
FACILITY MANAGEMENT OFFICE
BUILDING 117

DEPARTMENT OF DEFENSE
HAWAII ARMY NATIONAL GUARD
DESIGN AND PROJECT MANAGEMENT BRANCH

KALAELOA (FORMER BARBERS POINT NAS), HAWAII

BLDG 117 WINDOW SYSTEM REPLACEMENT - BRAVO 117

ABBREVIATIONS, GENERAL NOTES & MATERIALS

SCALE: AS NOTED

STATE JOB NO. CA-1425-C

FEDERAL PROJECT NO. 15140059

SHEET 12 OF 35

A-001

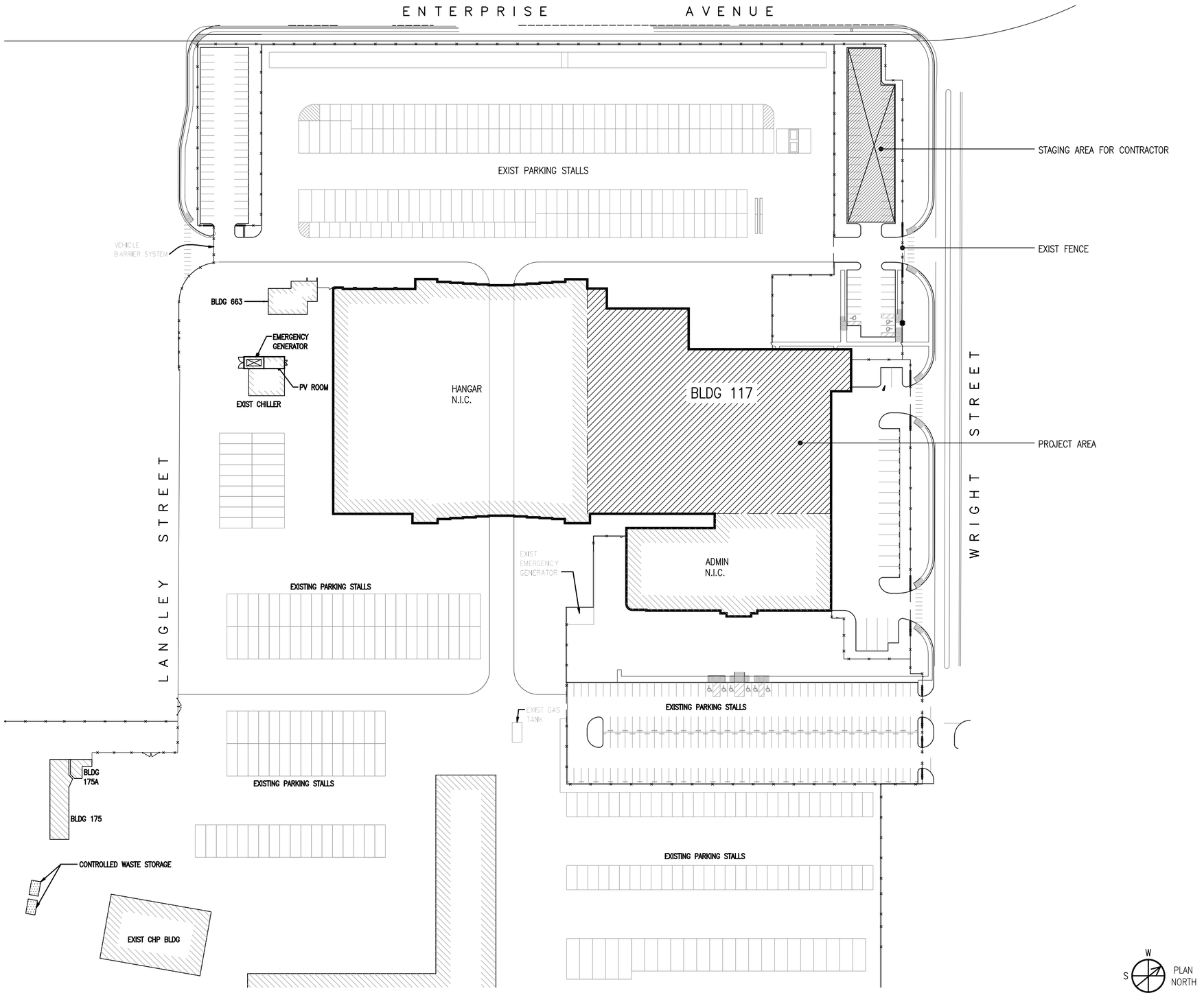

SITE PLAN

SCALE: 1/64" = 1'-0"

0 32' 64' 128'

A1

HAWAII ARMY NATIONAL GUARD

A/E INFO

I CERTIFY THAT THIS DRAWING WAS PREPARED BY ME OR UNDER MY DIRECT SUPERVISION.

BARBARA S. SHIDELER LICENSED PROFESSIONAL No. 7760 HAWAII, U.S.A.

EXPIRES APRIL 30, 2016

SEAL

STM	DESCRIPTION	DATE	APPR

SUBMITTAL PHASE: FINAL

SUBMITTAL DATE: FEB 17, 2016

DES MYW | DRW MYW | CHK BSS

STATE OF HAWAII
FACILITY MANAGEMENT OFFICE

HAWAII ARMY NATIONAL GUARD
DESIGN AND PROJECT MANAGEMENT BRANCH
DEPARTMENT OF DEFENSE

BUILDING 117

KALAELOA (FORMER BARBERS POINT NAS), HAWAII

BLDG 117 WINDOW SYSTEM REPLACEMENT - BRAVO 117

SITE PLAN

SCALE: AS NOTED

STATE JOB NO. CA-1425-C

FEDERAL PROJECT NO. 15140059

SHEET 13 OF 35

A-002

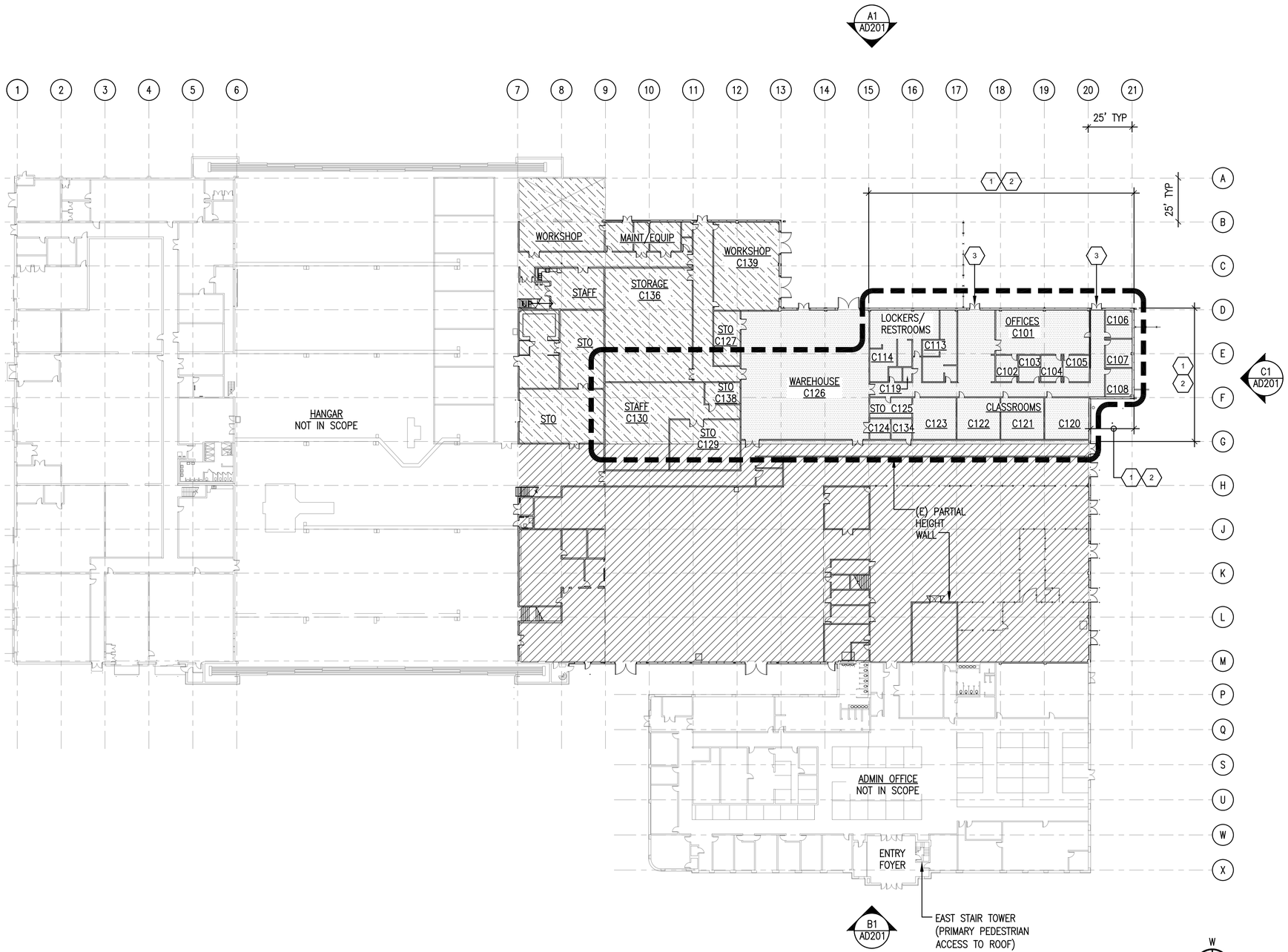

FIRST FLOOR DEMOLITION PLAN

SCALE: 1/32" = 1'-0"

0 16' 32' 64'

A1

DEMOLITION NOTES

1. REFER TO AD-SERIES DWGS FOR ADDITIONAL DEMO WORK. NO WORK AT INTERIOR UNO OR AS REQD FOR WDW DEMOLITION & INSTALLATION. REMOVE AND RECONSTRUCT INTERIOR WALLS AND SUSP CEILINGS THAT OBSTRUCT WDW DEMOLITION – SEE A-100s FLOOR PLANS AND DETAILS C2/A-502 AND C2/A-503.
2. SEE STRUCT DWGS FOR ADDITIONAL WORK.
3. SEE FIRST FLOOR DEMOLITION REFLECTED CEILING PLAN FOR ADDITIONAL DEMO WORK.
4. PROTECT EXISTING AC EQUIP, DUCTING & PIPING, FIRE SPRINKLERS AND LIGHTING. COORDINATE NECESSARY SERVICE INTERRUPTIONS WITH OWNERS.
5. SEE EMET MARCH 17, 2015 HAZARDOUS MATERIAL INSPECTION REPORT (LIMITED ASBESTOS AND LEAD PAINT SURVEY REPORT) BEFORE PROCEEDING WITH ANY DEMOLITION WORK.
6. PROTECT EXIST FURNITURE & INTERIOR FINISHES TO REMAIN. COORDINATE WITH USERS TO MINIMIZE DISRUPTION DURING CONSTRUCTION.
7. SEE ELEVS A-200s FOR EXIST PENETRATIONS/OBSTRUCTIONS. COORDINATE WITH OWNERS ON REMOVAL AND RECONSTRUCTION OF OBSTRUCTIONS AS REQD FOR WDW INSTALLATION.
8. SALVAGE EXIST ACCESS LADDERS AS SHOWN.
9. SALVAGE EXIST SIGNAGE FOR REINSTALLATION – COORDINATE WITH OWNERS.
10. EXISTING RACK AND PINION COMPONENTS TO REMAIN AT NEW FIXED WDW LOCATIONS.

LEGEND

EXISTING RACK AND PINION GEAR BOX TO REMAIN WO

PROJECT SCOPE: REPLACE WINDOWS INCLUDING FRAME, SASH, AND GLAZING, AND DOOR GLAZING

KEY NOTES

1. REMOVE EXIST WDWS, REFER TO EXTERIOR ELEVATIONS AD200s SERIES FOR DETAILED DESCRIPTION.
2. REMOVE ALL WINDOW SILL FLASHING
3. EXISTING EXTERIOR DOORS TO REMAIN UNLESS OTHERWISE NOTED. REMOVE ALL GLAZING.

BLDG 117 USER CLASSIFICATION

USPFO CLASS IX WAREHOUSE

BRAVO 117

FMS

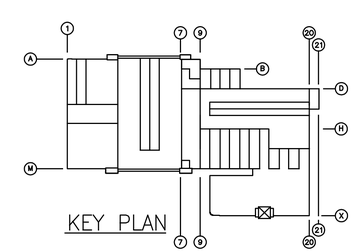

A/E INFO

I CERTIFY THAT THIS DRAWING WAS PREPARED BY ME OR UNDER MY DIRECT SUPERVISION.

BARBARA S. SHIDELER
LICENSED PROFESSIONAL
No. 7760
HAWAII, U.S.A.

EXPIRES APRIL 30, 2016 SEAL

SYM	DESCRIPTION	DATE	APPR

SUBMITTAL PHASE: FINAL

SUBMITTAL DATE: FEB 17, 2016

DES MYW | DRW MYW | CHK BSS

STATE OF HAWAII
FACILITY MANAGEMENT OFFICE
BUILDING 117

DEPARTMENT OF DEFENSE
DESIGN AND PROJECT MANAGEMENT BRANCH
HAWAII ARMY NATIONAL GUARD

KALAELOA (FORMER BARBERS POINT NAS), HAWAII

BLDG 117 WINDOW SYSTEM REPLACEMENT - BRAVO 117

FIRST FLOOR DEMOLITION PLAN

SCALE: AS NOTED

STATE JOB NO. CA-1425-C

FEDERAL PROJECT NO. 15140059

SHEET 14 OF 35

AD101

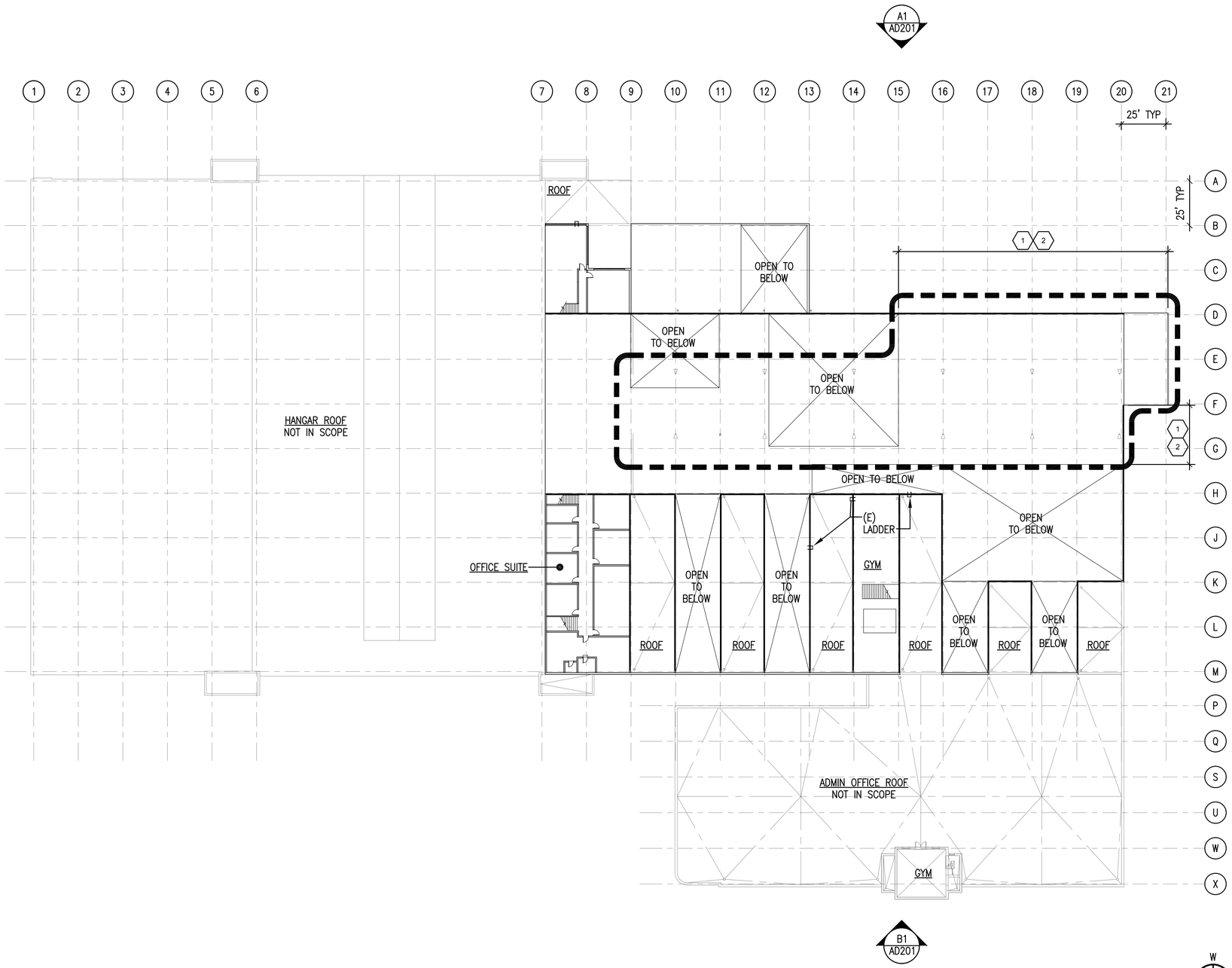

MEZZANINE DEMOLITION PLAN - 2ND TIER WDWS

SCALE: 1/32" = 1'-0"

0 16' 32' 64'

A1

DEMOLITION NOTES

1. REFER TO AD-SERIES DWGS FOR ADDITIONAL DEMO WORK. NO WORK AT INTERIOR UNO OR AS REQD FOR WDW DEMOLITION & INSTALLATION. REMOVE AND RECONSTRUCT INTERIOR WALLS AND SUSP CEILINGS THAT OBSTRUCT WDW DEMOLITION – SEE A-100s FLOOR PLANS AND DETAILS C2/A-502 AND C2/A-503.
2. SEE STRUCT DWGS FOR ADDITIONAL WORK.
3. SEE FIRST FLOOR DEMOLITION REFLECTED CEILING PLAN FOR ADDITIONAL DEMO WORK.
4. PROTECT EXISTING AC EQUIP, DUCTING & PIPING, FIRE SPRINKLERS AND LIGHTING. COORDINATE NECESSARY SERVICE INTERRUPTIONS WITH OWNERS.
5. SEE EMET MARCH 17, 2015 HAZARDOUS MATERIAL INSPECTION REPORT (LIMITED ASBESTOS AND LEAD PAINT SURVEY REPORT) BEFORE PROCEEDING WITH ANY DEMOLITION WORK.
6. PROTECT EXIST FURNITURE & INTERIOR FINISHES TO REMAIN. COORDINATE WITH USERS TO MINIMIZE DISRUPTION DURING CONSTRUCTION.
7. SEE ELEVS A-200s FOR EXIST PENETRATIONS/OBSTRUCTIONS. COORDINATE WITH OWNERS ON REMOVAL AND RECONSTRUCTION OF OBSTRUCTIONS AS REQD FOR WDW INSTALLATION.
8. SALVAGE EXIST ACCESS LADDERS AS SHOWN.
9. SALVAGE EXIST SIGNAGE FOR REINSTALLATION – COORDINATE WITH OWNERS.
10. EXISTING RACK AND PINION COMPONENTS TO REMAIN AT NEW FIXED WDW LOCATIONS.

LEGEND

EXISTING RACK AND PINION GEAR BOX TO REMAIN WO

PROJECT SCOPE: REPLACE WINDOWS INCLUDING FRAME, SASH, AND GLAZING, AND DOOR GLAZING

KEY NOTES

1. REMOVE EXIST WDWS, REFER TO EXTERIOR ELEVATIONS AD200s SERIES FOR DETAILED DESCRIPTION.
2. REMOVE ALL WINDOW SILL FLASHING
3. EXISTING EXTERIOR DOORS TO REMAIN UNLESS OTHERWISE NOTED. REMOVE ALL GLAZING.

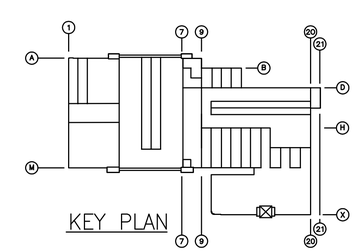

A/E INFO

I CERTIFY THAT THIS DRAWING WAS PREPARED BY ME OR UNDER MY DIRECT SUPERVISION.

BARBARA S. SHIDELER LICENSED PROFESSIONAL No. 7760 HAWAII, U.S.A.

EXPIRES APRIL 30, 2016 SEAL

SYM	DESCRIPTION	DATE	APPR

SUBMITTAL PHASE: FINAL

SUBMITTAL DATE: FEB 17, 2016

DES MYW | DRW MYW | CHK BSS

STATE OF HAWAII
FACILITY MANAGEMENT OFFICE

HAWAII ARMY NATIONAL GUARD
DESIGN AND PROJECT MANAGEMENT BRANCH
DEPARTMENT OF DEFENSE

BUILDING 117
KALAELOA (FORMER BARBERS POINT NAS), HAWAII

BLDG 117 WINDOW SYSTEM REPLACEMENT - BRAVO 117

MEZZANINE DEMOLITION FLOOR PLAN – 2ND TIER WINDOWS

SCALE: AS NOTED

STATE JOB NO. CA-1425-C

FEDERAL PROJECT NO. 15140059

SHEET 15 OF 35

AD102

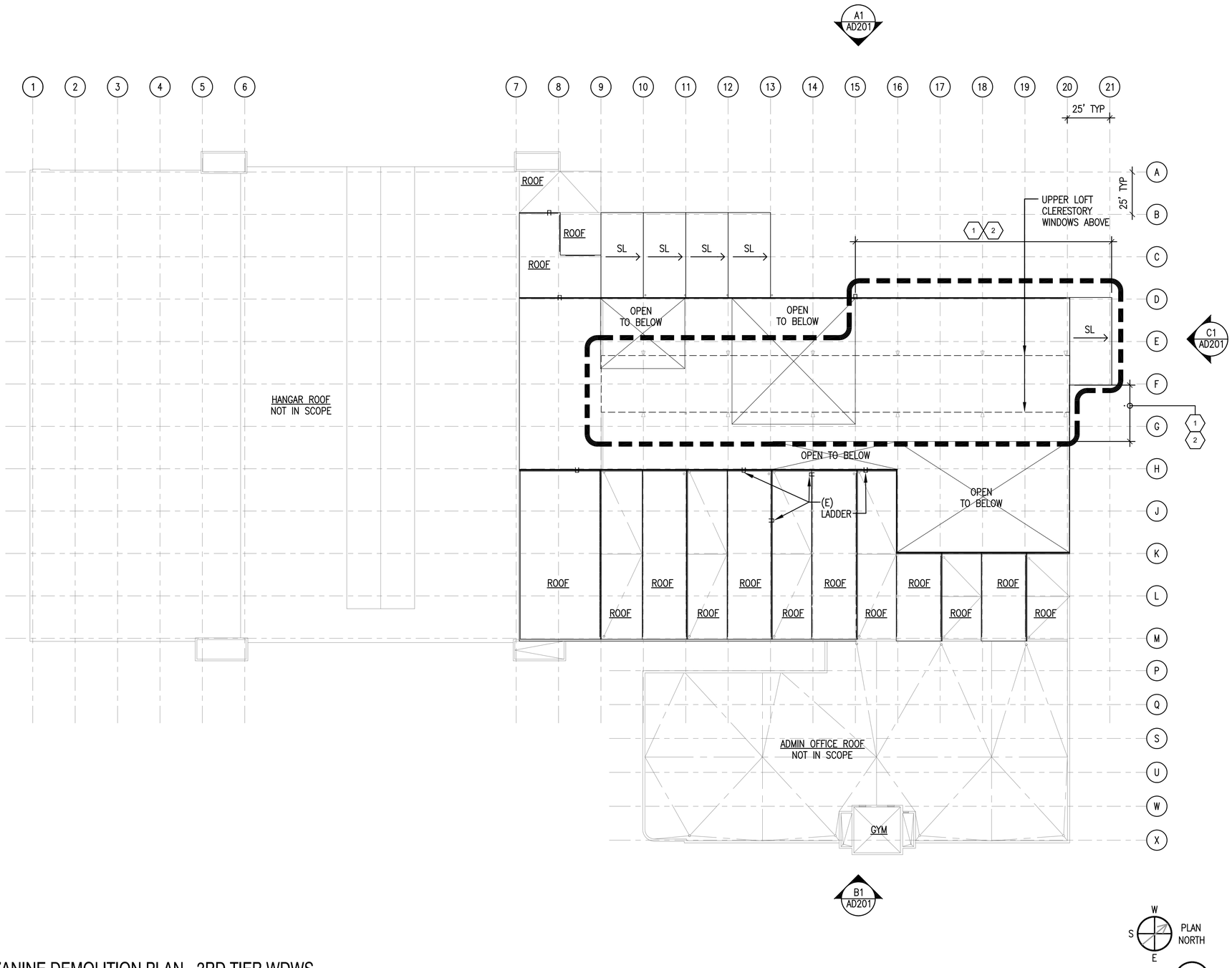

MEZZANINE DEMOLITION PLAN - 3RD TIER WDWS

SCALE: 1/32" = 1'-0"

0 16' 32' 64'

A1

DEMOLITION NOTES

1. REFER TO AD-SERIES DWGS FOR ADDITIONAL DEMO WORK. NO WORK AT INTERIOR UNO OR AS REQD FOR WDW DEMOLITION & INSTALLATION. REMOVE AND RECONSTRUCT INTERIOR WALLS AND SUSP CEILINGS THAT OBSTRUCT WDW DEMOLITION – SEE A-100s FLOOR PLANS AND DETAILS C2/A-502 AND C2/A-503.
2. SEE STRUCT DWGS FOR ADDITIONAL WORK.
3. SEE FIRST FLOOR DEMOLITION REFLECTED CEILING PLAN FOR ADDITIONAL DEMO WORK.
4. PROTECT EXISTING AC EQUIP, DUCTING & PIPING, FIRE SPRINKLERS AND LIGHTING. COORDINATE NECESSARY SERVICE INTERRUPTIONS WITH OWNERS.
5. SEE EMET MARCH 17, 2015 HAZARDOUS MATERIAL INSPECTION REPORT (LIMITED ASBESTOS AND LEAD PAINT SURVEY REPORT) BEFORE PROCEEDING WITH ANY DEMOLITION WORK.
6. PROTECT EXIST FURNITURE & INTERIOR FINISHES TO REMAIN. COORDINATE WITH USERS TO MINIMIZE DISRUPTION DURING CONSTRUCTION.
7. SEE ELEVS A-200s FOR EXIST PENETRATIONS/OBSTRUCTIONS. COORDINATE WITH OWNERS ON REMOVAL AND RECONSTRUCTION OF OBSTRUCTIONS AS REQD FOR WDW INSTALLATION.
8. SALVAGE EXIST ACCESS LADDERS AS SHOWN.
9. SALVAGE EXIST SIGNAGE FOR REINSTALLATION – COORDINATE WITH OWNERS.
10. EXISTING RACK AND PINION COMPONENTS TO REMAIN AT NEW FIXED WDW LOCATIONS.

LEGEND

EXISTING RACK AND PINION GEAR BOX TO REMAIN WO

PROJECT SCOPE: REPLACE WINDOWS INCLUDING FRAME, SASH, AND GLAZING, AND DOOR GLAZING

KEY NOTES

1. REMOVE EXIST WDWS, REFER TO EXTERIOR ELEVATIONS AD200s SERIES FOR DETAILED DESCRIPTION.
2. REMOVE ALL WINDOW SILL FLASHING
3. EXISTING EXTERIOR DOORS TO REMAIN UNLESS OTHERWISE NOTED. REMOVE ALL GLAZING.

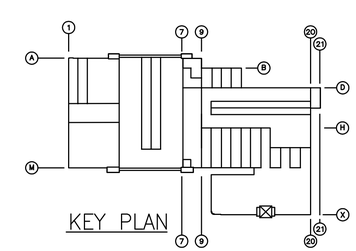

KEY PLAN

HAWAII ARMY NATIONAL GUARD

A/E INFO

I CERTIFY THAT THIS DRAWING WAS PREPARED BY ME OR UNDER MY DIRECT SUPERVISION.

BARBARA S. SHIDELER LICENSED PROFESSIONAL No. 7760 HAWAII, U.S.A.

EXPIRES APRIL 30, 2016 SEAL

SYM	DESCRIPTION	DATE	APPR

SUBMITTAL PHASE: FINAL

SUBMITTAL DATE: FEB 17, 2016

DES MYW | DRW MYW | CHK BSS

STATE OF HAWAII
FACILITY MANAGEMENT OFFICE
DEPARTMENT OF DEFENSE
DESIGN AND PROJECT MANAGEMENT BRANCH
HAWAII ARMY NATIONAL GUARD
BUILDING 117
KALAELOA (FORMER BARBERS POINT NAS), HAWAII
BLDG 117 WINDOW SYSTEM REPLACEMENT - BRAVO 117
MEZZANINE DEMOLITION FLOOR PLAN – 3RD TIER WINDOWS

SCALE: AS NOTED

STATE JOB NO. CA-1425-C

FEDERAL PROJECT NO. 15140059

SHEET 16 OF 35

AD103

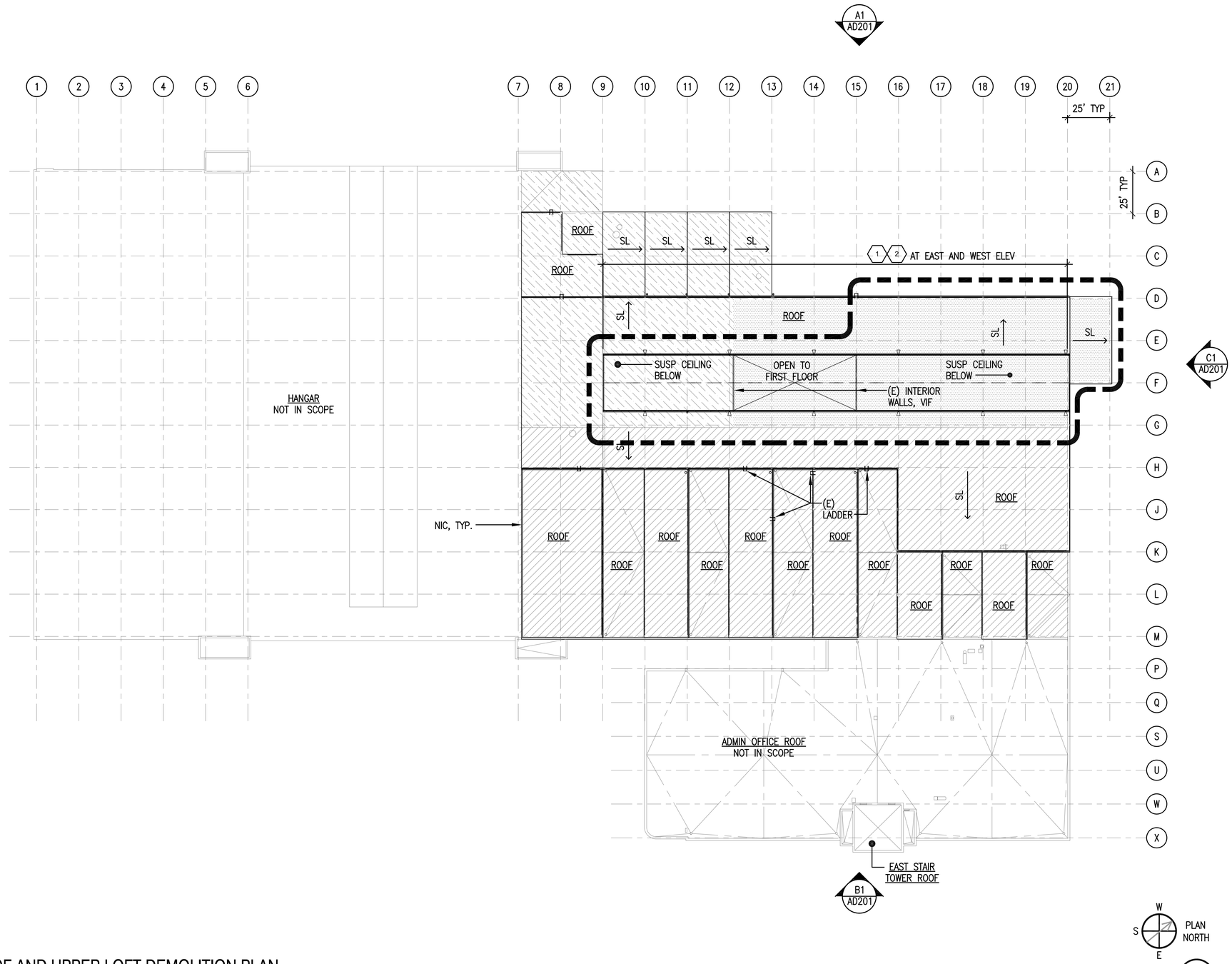

ROOF AND UPPER LOFT DEMOLITION PLAN

SCALE: 1/32" = 1'-0"

0 16' 32' 64'

A1

DEMOLITION NOTES

1. REFER TO AD-SERIES DWGS FOR ADDITIONAL DEMO WORK. NO WORK AT INTERIOR UNO OR AS REQD FOR WDW DEMOLITION & INSTALLATION. REMOVE AND RECONSTRUCT INTERIOR WALLS AND SUSP CEILINGS THAT OBSTRUCT WDW DEMOLITION – SEE A-100s FLOOR PLANS AND DETAILS C2/A-502 AND C2/A-503.
2. SEE STRUCT DWGS FOR ADDITIONAL WORK.
3. SEE FIRST FLOOR DEMOLITION REFLECTED CEILING PLAN FOR ADDITIONAL DEMO WORK.
4. PROTECT EXISTING AC EQUIP, DUCTING & PIPING, FIRE SPRINKLERS AND LIGHTING. COORDINATE NECESSARY SERVICE INTERRUPTIONS WITH OWNERS.
5. SEE EMET MARCH 17, 2015 HAZARDOUS MATERIAL INSPECTION REPORT (LIMITED ASBESTOS AND LEAD PAINT SURVEY REPORT) BEFORE PROCEEDING WITH ANY DEMOLITION WORK.
6. PROTECT EXIST FURNITURE & INTERIOR FINISHES TO REMAIN. COORDINATE WITH USERS TO MINIMIZE DISRUPTION DURING CONSTRUCTION.
7. SEE ELEVS A-200s FOR EXIST PENETRATIONS/OBSTRUCTIONS. COORDINATE WITH OWNERS ON REMOVAL AND RECONSTRUCTION OF OBSTRUCTIONS AS REQD FOR WDW INSTALLATION.
8. SALVAGE EXIST ACCESS LADDERS AS SHOWN.
9. SALVAGE EXIST SIGNAGE FOR REINSTALLATION – COORDINATE WITH OWNERS.
10. EXISTING RACK AND PINION COMPONENTS TO REMAIN AT NEW FIXED WDW LOCATIONS.

LEGEND

EXISTING RACK AND PINION GEAR BOX TO REMAIN WO

PROJECT SCOPE: REPLACE WINDOWS INCLUDING FRAME, SASH, AND GLAZING, AND DOOR GLAZING

KEY NOTES

1. REMOVE EXIST WDWS, REFER TO EXTERIOR ELEVATIONS AD200s SERIES FOR DETAILED DESCRIPTION.
2. REMOVE ALL WINDOW SILL FLASHING
3. EXISTING EXTERIOR DOORS TO REMAIN UNLESS OTHERWISE NOTED. REMOVE ALL GLAZING.

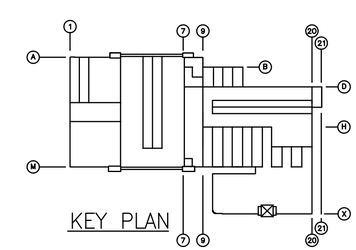

KEY PLAN

A/E INFO

I CERTIFY THAT THIS DRAWING WAS PREPARED BY ME OR UNDER MY DIRECT SUPERVISION:

BARBARA S. SHIDELER, LICENSED PROFESSIONAL, No. 7760, HAWAII, U.S.A.

EXPIRES APRIL 30, 2016 SEAL

SYM	DESCRIPTION	DATE	APPR

SUBMITTAL PHASE: FINAL

SUBMITTAL DATE: FEB 17, 2016

DES MYW DRW MYW CHK BSS

DEPARTMENT OF DEFENSE
HAWAII ARMY NATIONAL GUARD
DESIGN AND PROJECT MANAGEMENT BRANCH
STATE OF HAWAII
FACILITY MANAGEMENT OFFICE
KALAELOA (FORMER BARBERS POINT NAS), HAWAII
BUILDING 117
BLDG 117 WINDOW SYSTEM REPLACEMENT - BRAVO 117
ROOF AND UPPER LOFT DEMOLITION ROOF PLAN

SCALE: AS NOTED

STATE JOB NO. CA-1425-C

FEDERAL PROJECT NO. 15140059

SHEET 17 OF 35

AD104

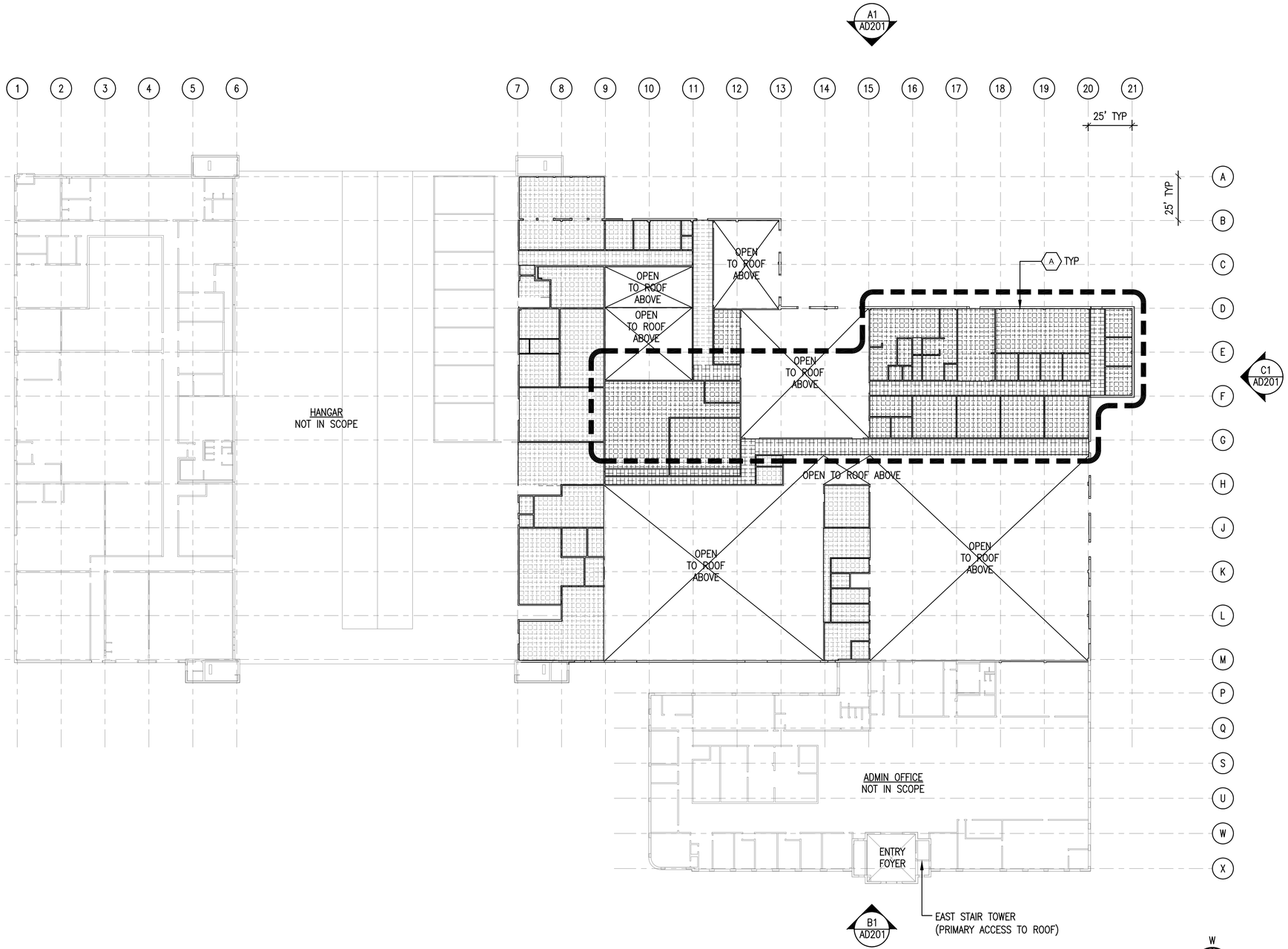

FIRST FLOOR DEMOLITION REFLECTED CEILING PLAN

SCALE: 1/32" = 1'-0"

0 16' 32' 64'

A1

DEMOLITION NOTES

1. REFER TO AD-SERIES DWGS FOR ADDITIONAL DEMO WORK. NO WORK AT INTERIOR UNO OR AS REQD FOR WDW DEMOLITION & INSTALLATION. REMOVE AND RECONSTRUCT INTERIOR WALLS AND SUSP CEILINGS THAT OBSTRUCT WDW DEMOLITION – SEE A-100s FLOOR PLANS AND DETAILS C2/A-502 AND C2/A-503.
2. SEE STRUCT DWGS FOR ADDITIONAL WORK.
3. PROTECT EXISTING AC EQUIP, DUCTING & PIPING, FIRE SPRINKLERS AND LIGHTING. COORDINATE NECESSARY SERVICE INTERRUPTIONS WITH OWNERS.
4. SEE EMET MARCH 17, 2015 HAZARDOUS MATERIAL INSPECTION REPORT (LIMITED ASBESTOS AND LEAD PAINT SURVEY REPORT) BEFORE PROCEEDING WITH ANY DEMOLITION WORK.
5. PROTECT EXIST FURNITURE & INTERIOR FINISHES TO REMAIN. COORDINATE WITH OWNERS TO MINIMIZE DISRUPTION DURING CONSTRUCTION.
6. SEE ELEVS A-200s FOR EXIST PENETRATIONS/OBSTRUCTIONS. COORDINATE WITH OWNERS ON REMOVAL AND RECONSTRUCTION OF OBSTRUCTIONS AS REQD FOR WDW INSTALLATION.
7. SALVAGE EXIST SIGNAGE FOR REINSTALLATION – COORDINATE WITH OWNERS.
8. EXISTING RACK AND PINION COMPONENTS TO REMAIN AT NEW FIXED WDW LOCATIONS.
9. ASSUME EXIST AC EQUIP, DUCTING & PIPING ARE ABOVE SUSP CEILING. CONTRACTOR TO INVESTIGATE.

LEGEND

- EXISTING RACK AND PINION GEAR BOX TO REMAIN
- AREA OF WORK
- REMOVE EXIST SUSP CEILING TILE & GRID
- EXIST SUSP CEILING TILE & GRID TO REMAIN

KEY NOTES

(A) REMOVE EXIST SUSP CLG TILE & GRID AS REQD TO ACCOMMODATE WINDOW INSTALLATION.

BLDG 117 USER CLASSIFICATION

- USPFO CLASS IX WAREHOUSE
- BRAVO 117
- FMS

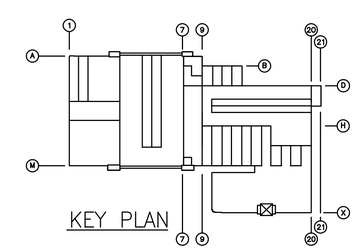

KEY PLAN

HAWAII ARMY NATIONAL GUARD

A/E INFO

I CERTIFY THAT THIS DRAWING WAS PREPARED BY ME OR UNDER MY DIRECT SUPERVISION.

BARBARA S. SHIDELER LICENSED PROFESSIONAL No. 7760 HAWAII, U.S.A.

EXPIRES APRIL 30, 2016 SEAL

SYM	DESCRIPTION	DATE	APPR

SUBMITTAL PHASE: FINAL

SUBMITTAL DATE: FEB 17, 2016

DES MYW | DRW MYW | CHK BSS

STATE OF HAWAII
FACILITY MANAGEMENT OFFICE
BUILDING 117

DEPARTMENT OF DEFENSE
DESIGN AND PROJECT MANAGEMENT BRANCH

HAWAII ARMY NATIONAL GUARD

KALAELOA (FORMER BARBERS POINT NAS), HAWAII -

BLDG 117 WINDOW SYSTEM REPLACEMENT - BRAVO 117

FIRST FLOOR DEMOLITION REFLECTED CEILING PLAN

SCALE: AS NOTED

STATE JOB NO. CA-1425-C

FEDERAL PROJECT NO. 15140059

SHEET 18 OF 35

AD111

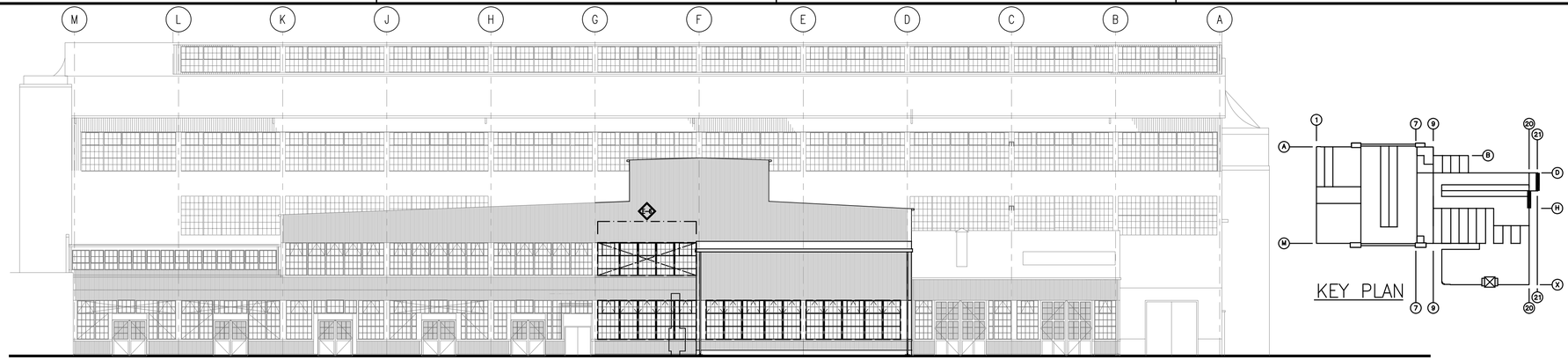

PARTIAL NORTH ELEVATION FOR DEMOLITION

SCALE: 1/16" = 1'-0"

0 8' 16' 32'

C1

KEY PLAN

DEMOLITION LEGEND

REMOVE EXISTING WINDOWS. SALVAGE EXIST RACK AND PINION SYSTEM AT LOCATIONS OF NEW FIXED WINDOWS. REMOVE ALL SECURITY BARS THAT COVER UPPER TIER WINDOWS. REMOVE EXIST MULLIONS WHERE INDICATED ON STRUCT DWGS. SEE STRUCT DWGS.

REMOVE EXISTING DOOR GLAZING. DOOR FRAMES AND GLAZING MULLIONS TO REMAIN. PROTECT EXISTING DOOR FEATURES DURING CONSTRUCTION.

EXISTING INTERIOR CROSS-BRACING TO REMAIN – SEE STRUCT DWGS.

EXISTING INTERIOR WALLS OR SUSP CEILING – SEE FLOOR PLANS AND ELEVS. COORDINATE WITH OWNERS ON REMOVAL AND RECONSTRUCTION OF OBSTRUCTIONS AS REQD FOR WDW INSTALLATION. SEE DETAILS C2/A-502 AND C2/A-503.

SEE DEMOLITION NOTES ON SHEET AD101.

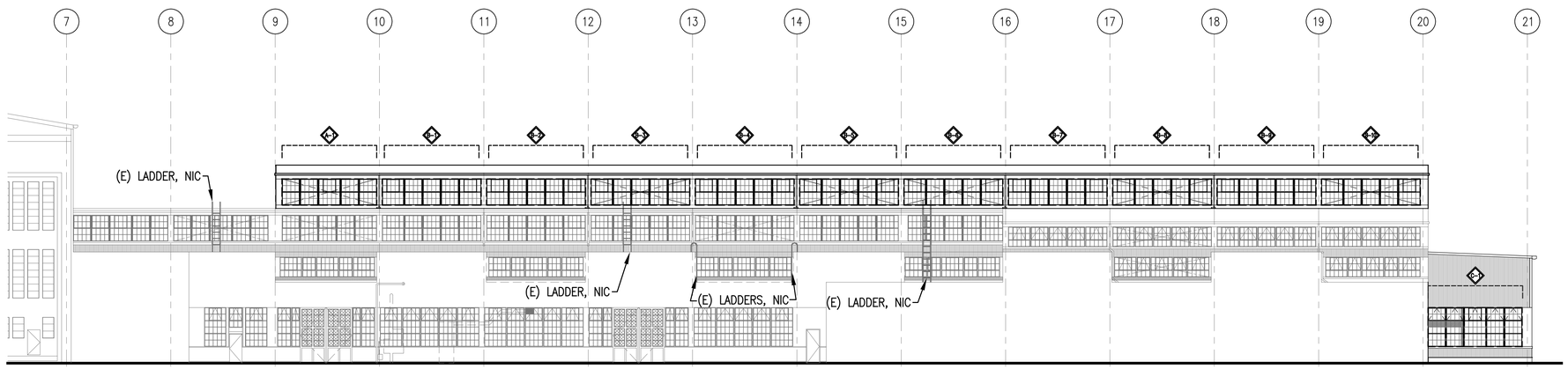

PARTIAL EAST ELEVATION FOR DEMOLITION

SCALE: 1/16" = 1'-0"

0 8' 16' 32'

B1

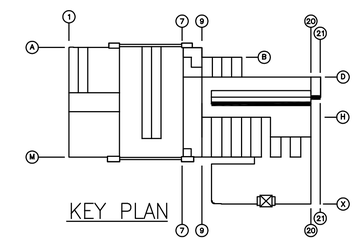

KEY PLAN

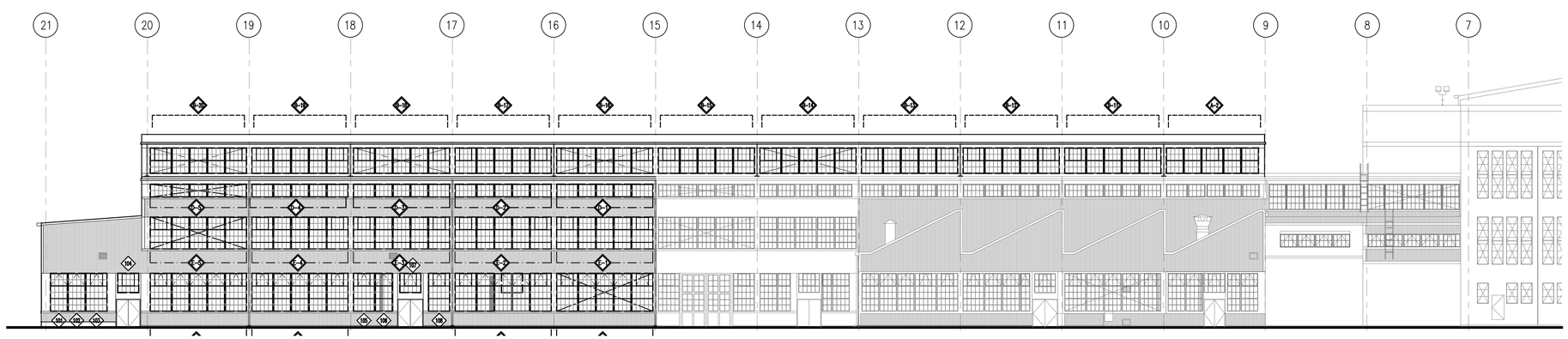

PARTIAL WEST ELEVATION FOR DEMOLITION

SCALE: 1/16" = 1'-0"

0 8' 16' 32'

A1

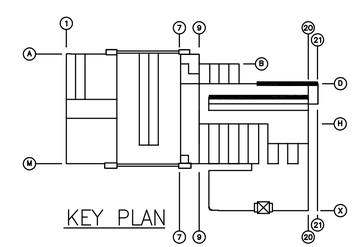

KEY PLAN

A/E INFO

I CERTIFY THAT THIS DRAWING WAS PREPARED BY ME OR UNDER MY DIRECT SUPERVISION.

BARBARA S. SHIDELER LICENSED PROFESSIONAL No. 7760 HAWAII, U.S.A.

EXPIRES APRIL 30, 2016

SEAL

SYM	DESCRIPTION	DATE	APPR

SUBMITTAL PHASE: FINAL

SUBMITTAL DATE: FEB 17, 2016

DES: MYW DRW: MYW CHK: BSS

DEPARTMENT OF DEFENSE
DESIGN AND PROJECT MANAGEMENT BRANCH
HAWAII ARMY NATIONAL GUARD
KALAELOA (FORMER BARBERS POINT NAS), HAWAII
BLDG 117 WINDOW SYSTEM REPLACEMENT - BRAVO 117
BUILDING 117
STATE OF HAWAII
FACILITY MANAGEMENT OFFICE

EXTERIOR ELEVATIONS FOR DEMOLITION NORTH (PARTIAL)

SCALE: AS NOTED

STATE JOB NO. CA-1425-C

FEDERAL PROJECT NO. 15140059

SHEET 19 OF 35

AD201

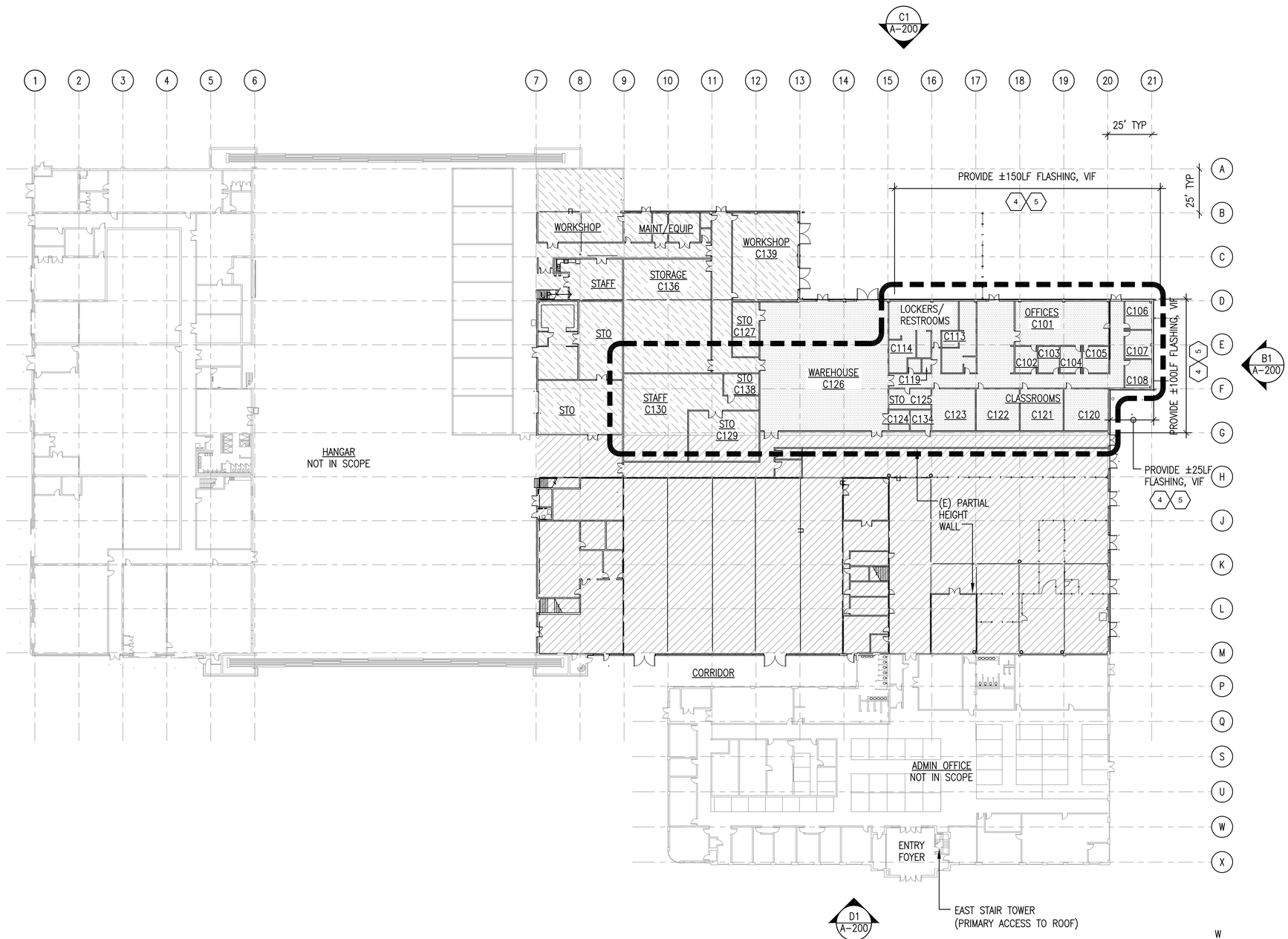

FIRST FLOOR PLAN

SCALE: 1/32" = 1'-0"

0 16' 32' 64'

A1

GENERAL NOTES

1. SEE ELEVS A-200s FOR EXISTING PENETRATIONS/OBSTRUCTIONS. COORDINATE WITH OWNERS ON REMOVAL AND RECONSTRUCTION OF OBSTRUCTIONS AS REQD FOR WDW INSTALLATION.
2. COORDINATE WITH OWNERS TO MINIMIZE DISRUPTION DURING CONSTRUCTION.
3. REFER TO REFLECTED CEILING PLAN A-111 FOR WORK RELATED TO EXIST CEILING FINISHES, MECH, FIRE PROTECTION AND ELEC EQUIP.
4. REFER TO PAINT SCHEDULE, A-603.

LEGEND

- EXISTING RACK AND PINION GEAR BOX TO REMAIN WO
- LOCATION OF RACK & PINION OPERATOR GEAR BOX
- SUSP CEILING – LIMITED ACCESS TO UPPER TIER WINDOWS FROM INTERIOR. INSTALL SUSP CEILING SYSTEM AS REQD FOR INSTALLATION OF UPPER TIER WDWS. PROTECT EXISTING MECH, FIRE PROTECTION AND ELEC EQUIP, VIF
- OPERATOR DRIVE SHAFT BRACKET FOR RACK & PINION, PER MFRS, PAINT TYP
- PROJECT SCOPE: NEW WINDOWS INCLUDING FRAME, SASH, AND GLAZING; AND DOOR GLAZING

KEYNOTES

4. FURNISH AND INSTALL WINDOWS: SEE A-200s AND A-600s SERIES
5. PROVIDE SILL FLASHING, VIF. SEE A5/A-504 & A4/A-504

BLDG 117 USER CLASSIFICATION

- USPFO CLASS IX WAREHOUSE
- BRAVO 117
- FMS

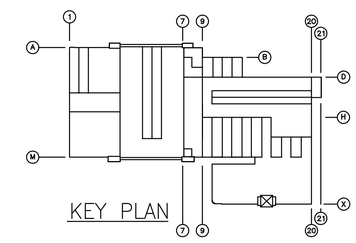

KEY PLAN

A/E INFO

I CERTIFY THAT THIS DRAWING WAS PREPARED BY ME OR UNDER MY DIRECT SUPERVISION.

BARBARA S. SHIDELER LICENSED PROFESSIONAL No. 7760 HAWAII, U.S.A.

EXPIRES APRIL 30, 2016 SEAL

SYM	DESCRIPTION	DATE	APPR

SUBMITTAL PHASE: FINAL

SUBMITTAL DATE: FEB 17, 2016

DES MYW | DRW MYW | CHK BSS

STATE OF HAWAII
FACILITY MANAGEMENT OFFICE
BUILDING 117

HAWAII ARMY NATIONAL GUARD
DESIGN AND PROJECT MANAGEMENT BRANCH
DEPARTMENT OF DEFENSE

KALAELOA (FORMER BARBERS POINT NAS), HAWAII

BLDG 117 WINDOW SYSTEM REPLACEMENT - BRAVO 117

FIRST FLOOR PLAN

SCALE: AS NOTED

STATE JOB NO. CA-1425-C

FEDERAL PROJECT NO. 15140059

SHEET 20 OF 35

A-101

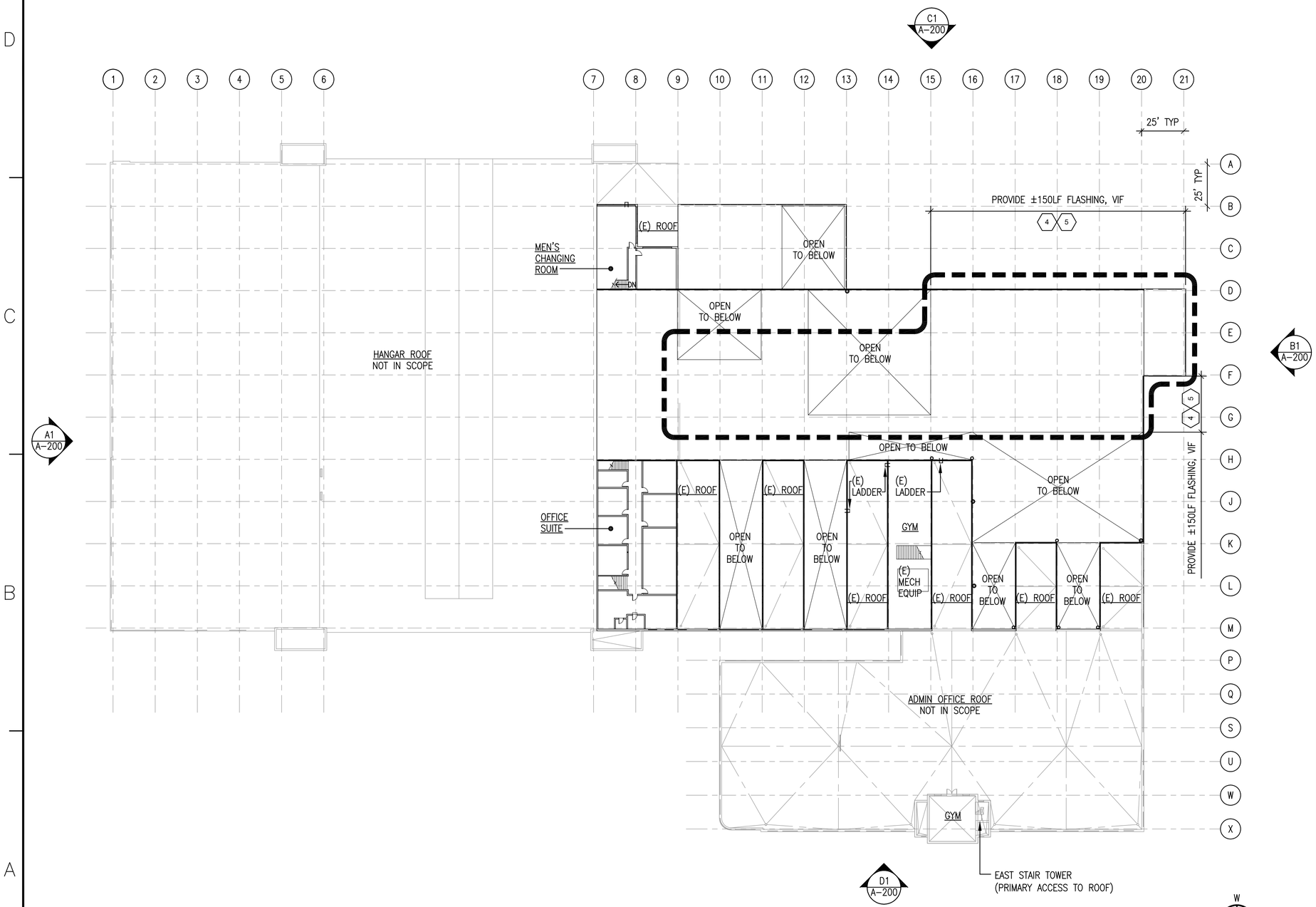

MEZZANINE FLOOR PLAN - 2ND TIER WINDOWS

SCALE: 1/32" = 1'-0"

0 16' 32' 64'

A1

GENERAL NOTES

1. SEE ELEVS A-200s FOR EXISTING PENETRATIONS/OBSTRUCTIONS. COORDINATE WITH OWNERS ON REMOVAL AND RECONSTRUCTION OF OBSTRUCTIONS AS REQD FOR WDW INSTALLATION.
2. COORDINATE WITH OWNERS TO MINIMIZE DISRUPTION DURING CONSTRUCTION.
3. REFER TO REFLECTED CEILING PLAN A-111 FOR WORK RELATED TO EXIST CEILING FINISHES, MECH, FIRE PROTECTION AND ELEC EQUIP.
4. REFER TO PAINT SCHEDULE, A-603.

LEGEND

- EXISTING RACK AND PINION GEAR BOX TO REMAIN WO
- LOCATION OF RACK & PINION OPERATOR GEAR BOX
- SUSP CEILING – LIMITED ACCESS TO UPPER TIER WINDOWS FROM INTERIOR. INSTALL SUSP CEILING SYSTEM AS REQD FOR INSTALLATION OF UPPER TIER WDWS. PROTECT EXISTING MECH, FIRE PROTECTION AND ELEC EQUIP, VIF
- OPERATOR DRIVE SHAFT BRACKET FOR RACK & PINION, PER MFRS, PAINT TYP
- PROJECT SCOPE: NEW WINDOWS INCLUDING FRAME, SASH, AND GLAZING; AND DOOR GLAZING

KEYNOTES

4. FURNISH AND INSTALL WINDOWS: SEE A-200s AND A-600s SERIES
5. PROVIDE SILL FLASHING, VIF. SEE A5/A-504 & A4/A-504

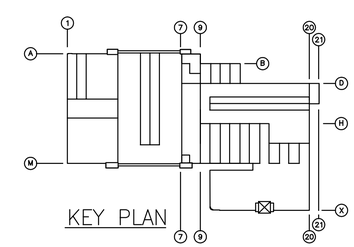

KEY PLAN

A/E INFO

I CERTIFY THAT THIS DRAWING WAS PREPARED BY ME OR UNDER MY DIRECT SUPERVISION.

BARBARA S. SHIDELER LICENSED PROFESSIONAL No. 7760 HAWAII, U.S.A.

EXPIRES APRIL 30, 2016 SEAL

SYM	DESCRIPTION	DATE	APPR

SUBMITTAL PHASE: FINAL

SUBMITTAL DATE: FEB 17, 2016

DES: MYW DRW: MYW CHK: BSS

STATE OF HAWAII
FACILITY MANAGEMENT OFFICE

HAWAII ARMY NATIONAL GUARD
DESIGN AND PROJECT MANAGEMENT BRANCH
DEPARTMENT OF DEFENSE

BUILDING 117
KALAELOA (FORMER BARBERS POINT NAS), HAWAII

BLDG 117 WINDOW SYSTEM REPLACEMENT - BRAVO 117

MEZZANINE FLOOR PLAN – 2ND TIER WINDOWS

SCALE: AS NOTED

STATE JOB NO. CA-1425-C

FEDERAL PROJECT NO. 15140059

SHEET 21 OF 35

A-102

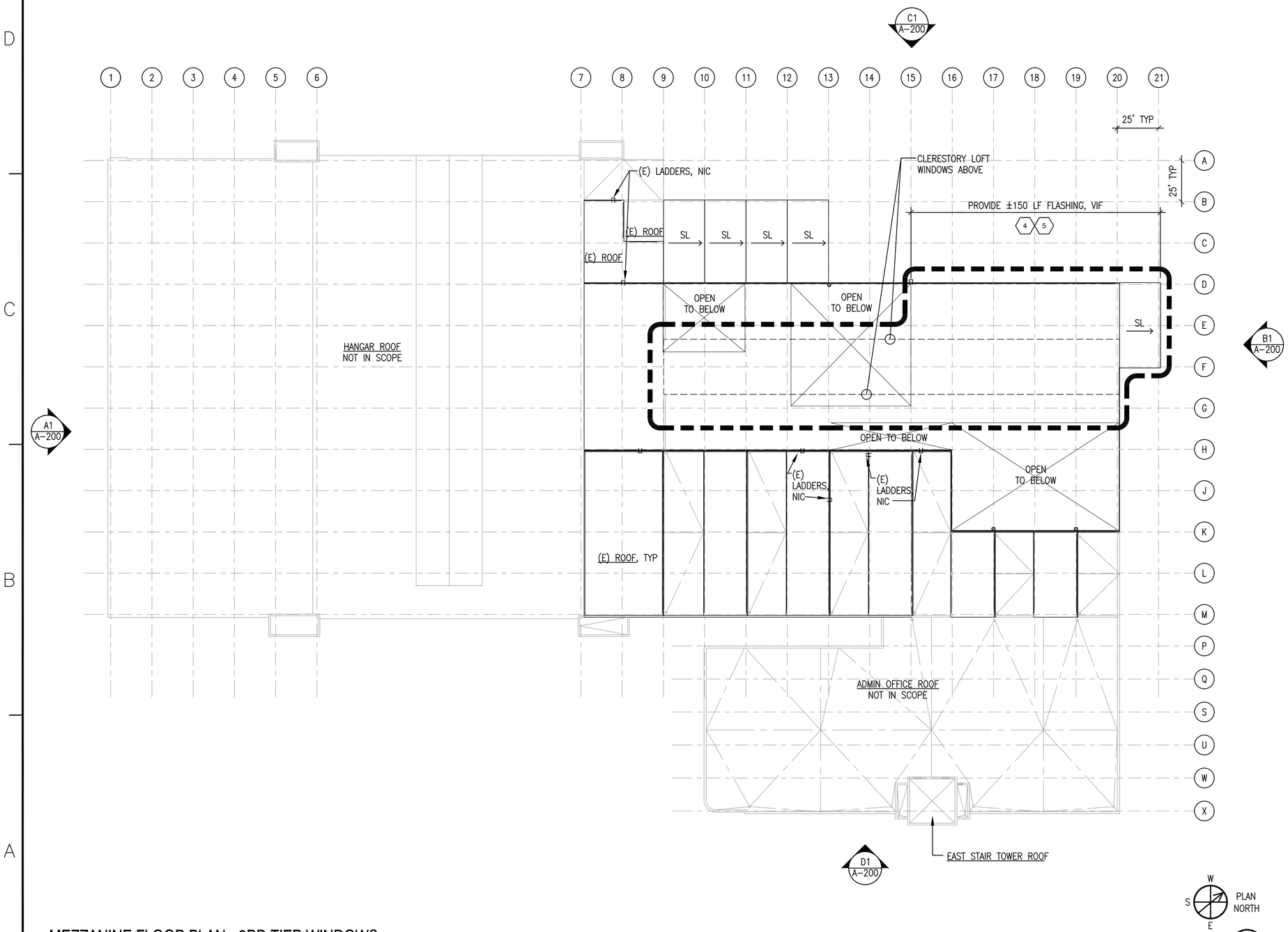

MEZZANINE FLOOR PLAN - 3RD TIER WINDOWS

SCALE: 1/32" = 1'-0"

0 16' 32' 64'

A1

GENERAL NOTES

1. SEE ELEVS A-200s FOR EXISTING PENETRATIONS/OBSTRUCTIONS. COORDINATE WITH OWNERS ON REMOVAL AND RECONSTRUCTION OF OBSTRUCTIONS AS REQD FOR WDW INSTALLATION.
2. COORDINATE WITH OWNERS TO MINIMIZE DISRUPTION DURING CONSTRUCTION.
3. REFER TO REFLECTED CEILING PLAN A-111 FOR WORK RELATED TO EXIST CEILING FINISHES, MECH, FIRE PROTECTION AND ELEC EQUIP.
4. REFER TO PAINT SCHEDULE, A-603.

LEGEND

- EXISTING RACK AND PINION GEAR BOX TO REMAIN WO
- LOCATION OF RACK & PINION OPERATOR GEAR BOX
- SUSP CEILING – LIMITED ACCESS TO UPPER TIER WINDOWS FROM INTERIOR. INSTALL SUSP CEILING SYSTEM AS REQD FOR INSTALLATION OF UPPER TIER WDWS. PROTECT EXISTING MECH, FIRE PROTECTION AND ELEC EQUIP, VIF
- OPERATOR DRIVE SHAFT BRACKET FOR RACK & PINION, PER MFRS, PAINT TYP
- PROJECT SCOPE: NEW WINDOWS INCLUDING FRAME, SASH, AND GLAZING; AND DOOR GLAZING

KEYNOTES

4. FURNISH AND INSTALL WINDOWS: SEE A-200s AND A-600s SERIES
5. PROVIDE SILL FLASHING, VIF. SEE A5/A-504 & A4/A-504

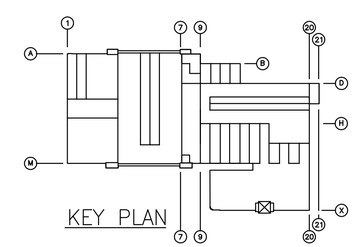

KEY PLAN

HAWAII ARMY NATIONAL GUARD

A/E INFO

I CERTIFY THAT THIS DRAWING WAS PREPARED BY ME OR UNDER MY DIRECT SUPERVISION.

BARBARA S. SHIDELER
LICENSED PROFESSIONAL
No. 7760
HAWAII, U.S.A.

EXPIRES APRIL 30, 2016

SEAL

SYM	DESCRIPTION	DATE	APPR

SUBMITTAL PHASE: FINAL

SUBMITTAL DATE: FEB 17, 2016

DES: MYW DRW: MYW CHK: BSS

STATE OF HAWAII
FACILITY MANAGEMENT OFFICE

HAWAII ARMY NATIONAL GUARD
DESIGN AND PROJECT MANAGEMENT BRANCH

BUILDING 117

KALAELOA (FORMER BARBERS POINT NAS), HAWAII

BLDG 117 WINDOW SYSTEM REPLACEMENT - BRAVO 117

MEZZANINE FLOOR PLAN – 3RD TIER WDWS

SCALE: AS NOTED

STATE JOB NO. CA-1425-C

FEDERAL PROJECT NO. 15140059

SHEET 22 OF 35

A-103

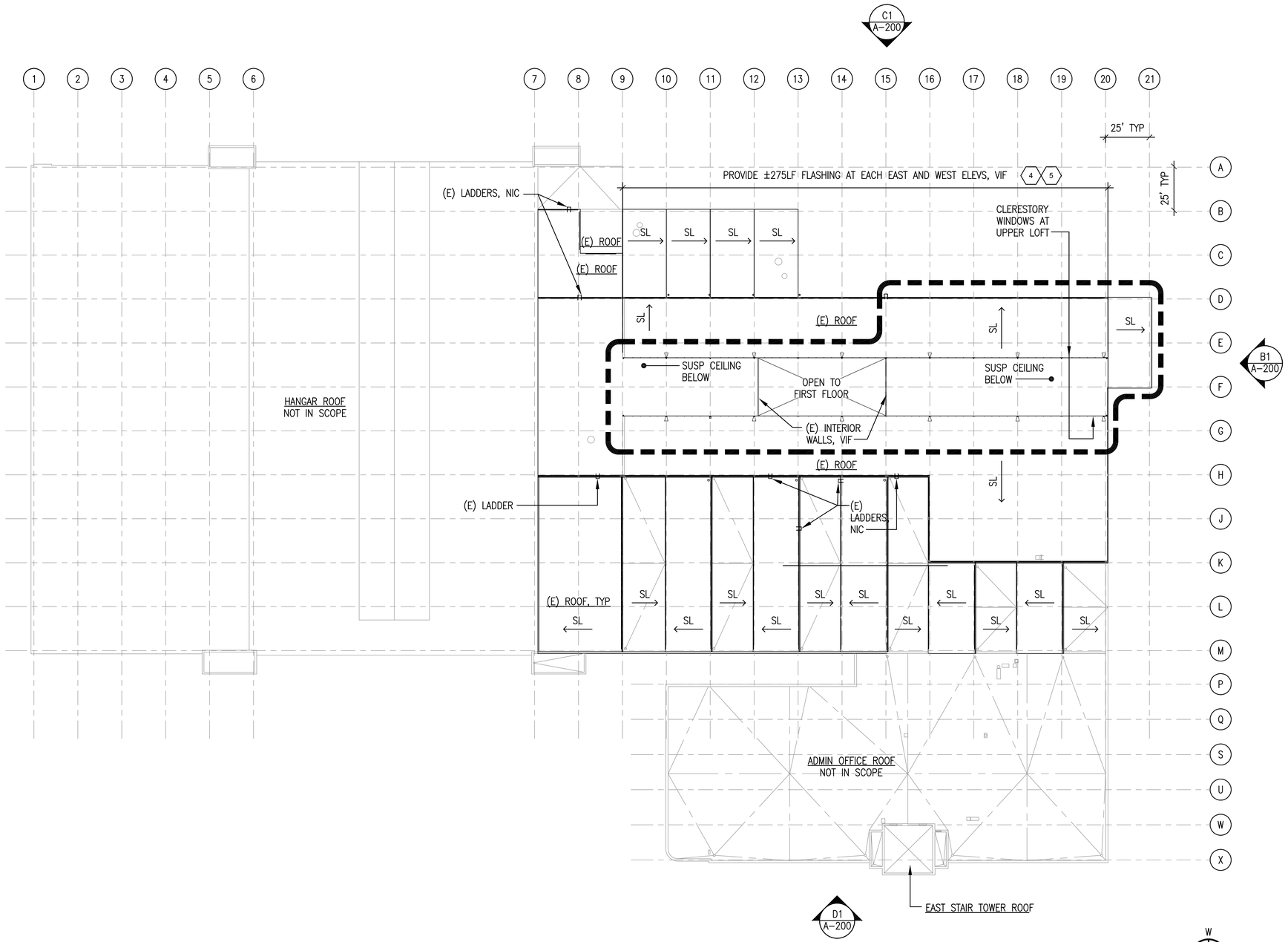

ROOF PLAN AND UPPER LOFT FLOOR PLAN

SCALE: 1/32" = 1'-0"

0 16' 32' 64'

A1

GENERAL NOTES

1. SEE ELEVS A-200s FOR EXISTING PENETRATIONS/OBSTRUCTIONS. COORDINATE WITH OWNERS ON REMOVAL AND RECONSTRUCTION OF OBSTRUCTIONS AS REQD FOR WDW INSTALLATION.
2. COORDINATE WITH OWNERS TO MINIMIZE DISRUPTION DURING CONSTRUCTION.
3. REFER TO REFLECTED CEILING PLAN A-111 FOR WORK RELATED TO EXIST CEILING FINISHES, MECH, FIRE PROTECTION AND ELEC EQUIP.
4. REFER TO PAINT SCHEDULE, A-603.

LEGEND

- EXISTING RACK AND PINION GEAR BOX TO REMAIN WO
- LOCATION OF RACK & PINION OPERATOR GEAR BOX
- SUSP CEILING – LIMITED ACCESS TO UPPER TIER WINDOWS FROM INTERIOR. INSTALL SUSP CEILING SYSTEM AS REQD FOR INSTALLATION OF UPPER TIER WDWS. PROTECT EXISTING MECH, FIRE PROTECTION AND ELEC EQUIP, VIF
- OPERATOR DRIVE SHAFT BRACKET FOR RACK & PINION, PER MFRS, PAINT TYP
- PROJECT SCOPE: NEW WINDOWS INCLUDING FRAME, SASH, AND GLAZING; AND DOOR GLAZING

KEYNOTES

4. FURNISH AND INSTALL WINDOWS: SEE A-200s AND A-600s SERIES
5. PROVIDE SILL FLASHING, VIF. SEE A5/A-504 & A4/A-504

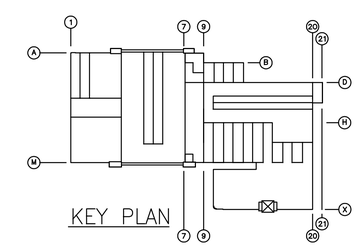

KEY PLAN

A/E INFO

I CERTIFY THAT THIS DRAWING WAS PREPARED BY ME OR UNDER MY DIRECT SUPERVISION.

BARBARA S. SHIDELER LICENSED PROFESSIONAL No. 7760 HAWAII, U.S.A.

EXPIRES APRIL 30, 2016 SEAL

SYM	DESCRIPTION	DATE	APPR

SUBMITTAL PHASE: FINAL

SUBMITTAL DATE: FEB 17, 2016

DES: MYW DRW: MYW CHK: BSS

STATE OF HAWAII
FACILITY MANAGEMENT OFFICE

HAWAII ARMY NATIONAL GUARD
DESIGN AND PROJECT MANAGEMENT BRANCH
DEPARTMENT OF DEFENSE

BUILDING 117

KALAELOA (FORMER BARBERS POINT NAS), HAWAII

BLDG 117 WINDOW SYSTEM REPLACEMENT - BRAVO 117

ROOF PLAN AND UPPER LOFT FLOOR PLAN

SCALE: AS NOTED

STATE JOB NO. CA-1425-C

FEDERAL PROJECT NO. 15140059

SHEET 23 OF 35

A-104

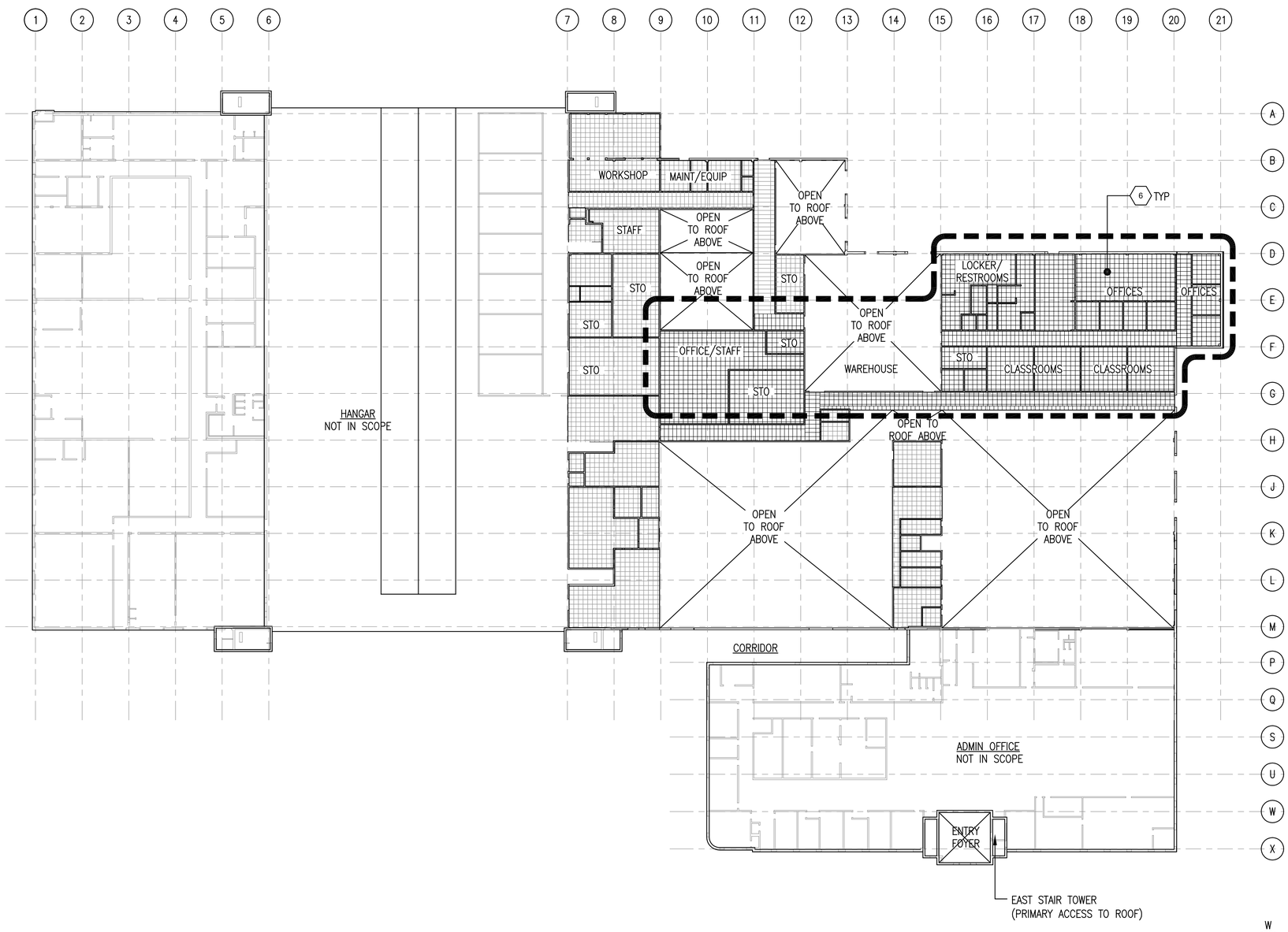

FIRST FLOOR REFLECTED CEILING PLAN

SCALE: 1/32" = 1'-0"

0 16' 32' 64'

A1

GENERAL NOTES

1. SEE ELEVS A-200s FOR EXISTING PENETRATIONS/OBSTRUCTIONS. COORDINATE WITH OWNERS ON REMOVAL AND RECONSTRUCTION OF OBSTRUCTIONS AS REQD FOR WDW INSTALLATION.
2. COORDINATE WITH OWNERS TO MINIMIZE DISRUPTION DURING CONSTRUCTION.
3. PROTECT EXISTING AC EQUIP, DUCTING & PIPING, FIRE SPRINKLERS AND LIGHTING. COORDINATE NECESSARY SERVICE INTERRUPTIONS WITH OWNERS.

LEGEND

- EXISTING RACK AND PINION GEAR BOX TO REMAIN WO
- LOCATION OF RACK & PINION OPERATOR GEAR BOX
- SUSP CEILING – LIMITED ACCESS TO UPPER TIER WINDOWS FROM INTERIOR. REPLACE SUSP CEILING SYSTEM FOR INSTALLATION OF UPPER TIER WDWS. PROTECT (E) MECH, FIRE PROTECTION AND ELEC EQUIP.
- EXIST SUSP CEILING TO REMAIN
- OPERATOR DRIVE SHAFT BRACKET FOR RACK & PINION, PER MFRS, PAINT TYP
- PROJECT SCOPE: FURNISH AND INSTALL WINDOWS INCLUDING FRAME, SASH, AND GLAZING, AND DOOR GLAZING

KEYNOTES

6 FURNISH AND INSTALL SUSP CLNG TILE & GRID, PROTECT (E) ELEC, MECH & FIRE PROTECTION EQUIP. REPLACE COMPONENTS DAMAGED DUE TO CONSTRUCTION.

BLDG 117 USER CLASSIFICATION

- USPFO CLASS IX WAREHOUSE
- BRAVO 117
- FMS

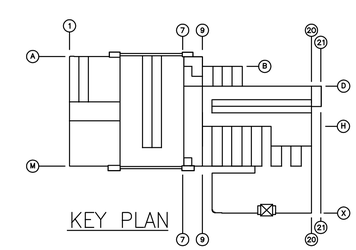

KEY PLAN

A/E INFO

I CERTIFY THAT THIS DRAWING WAS PREPARED BY ME OR UNDER MY DIRECT SUPERVISION.

BARBARA S. SHIDELER LICENSED PROFESSIONAL No. 7760 HAWAII, U.S.A.

EXPIRES APRIL 30, 2016 SEAL

SYM	DESCRIPTION	DATE	APPR

SUBMITTAL PHASE: FINAL

SUBMITTAL DATE: FEB 17, 2016

DES MYW DRW MYW CHK MYW

STATE OF HAWAII
FACILITY MANAGEMENT OFFICE
BUILDING 117

DEPARTMENT OF DEFENSE
HAWAII ARMY NATIONAL GUARD
DESIGN AND PROJECT MANAGEMENT BRANCH

KALAELOA (FORMER BARBERS POINT NAS), HAWAII

BLDG 117 WINDOW SYSTEM REPLACEMENT - BRAVO 117

FIRST FLOOR REFLECTED CEILING PLAN

SCALE: AS NOTED

STATE JOB NO. CA-1425-C

FEDERAL PROJECT NO. 15140059

SHEET 24 OF 35

A-111

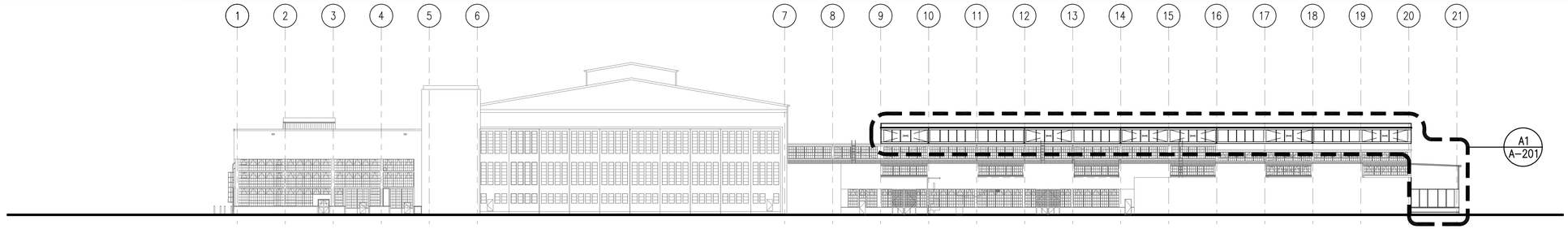

MAIN OFFICE BUILDING NOT SHOWN FOR CLARITY.

EAST ELEVATION

SCALE: 1/32" = 1'-0"

0 16' 32' 64'

D1

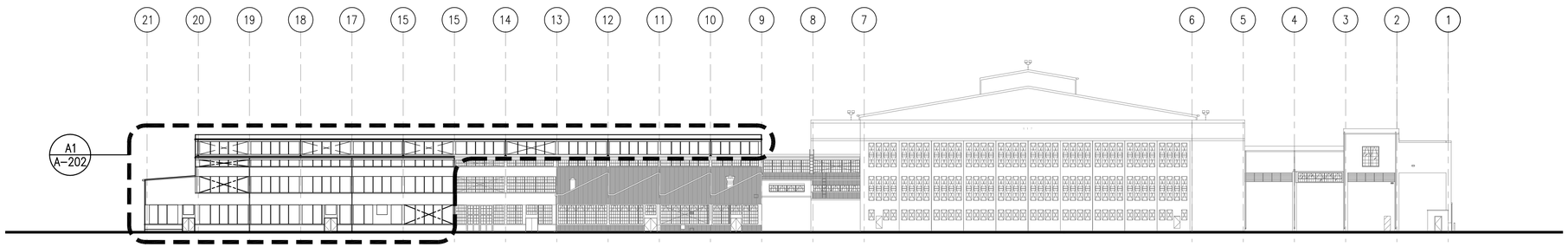

WEST ELEVATION

SCALE: 1/32" = 1'-0"

0 16' 32' 64'

C1

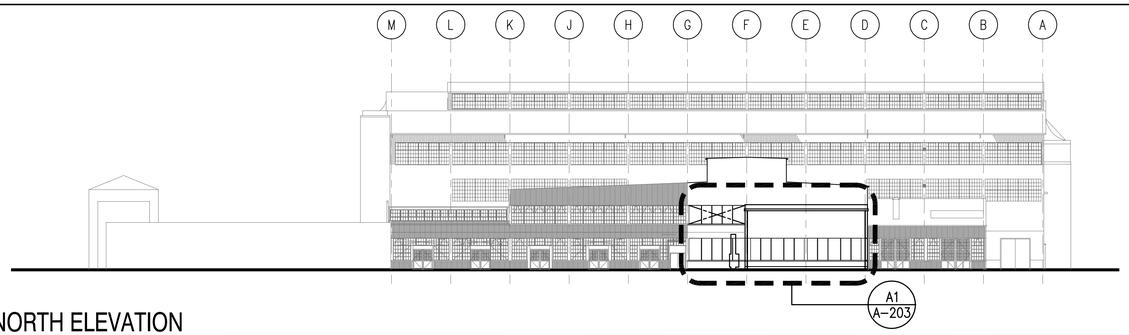

NORTH ELEVATION

SCALE: 1/32" = 1'-0"

0 16' 32' 64'

B1

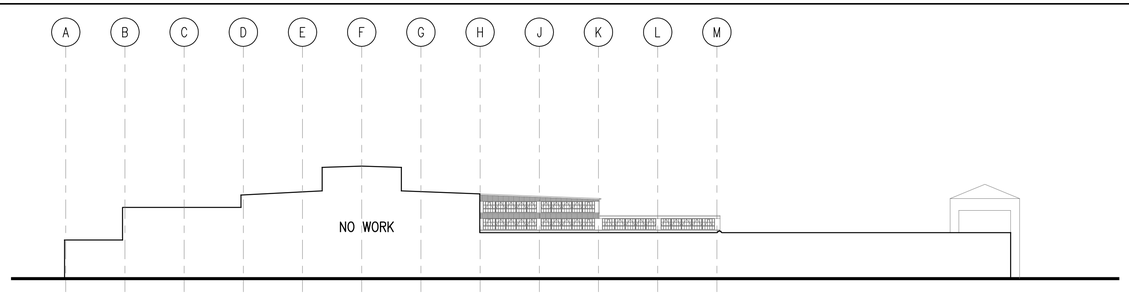

SOUTH ELEVATION - FOR REFERENCE ONLY

SCALE: 1/32" = 1'-0"

0 16' 32' 64'

A1

GENERAL NOTES

THIS SHEET FOR REFERENCE ONLY; SEE ENLARGED EXTERIOR ELEVATIONS

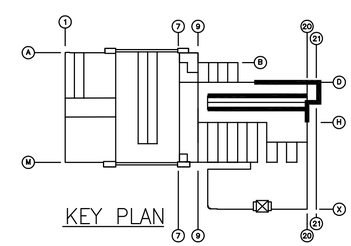

KEY PLAN

A/E INFO

I CERTIFY THAT THIS DRAWING WAS PREPARED BY ME OR UNDER MY DIRECT SUPERVISION.

BARBARA S. SHIDELER LICENSED PROFESSIONAL No. 7760 HAWAII, U.S.A.

EXPIRES APRIL 30, 2016

SEAL

STM	DESCRIPTION	DATE	APPR

SUBMITTAL PHASE: FINAL

SUBMITTAL DATE: FEB 17, 2016

DES MYW | DRW MYW | CHK BSS

STATE OF HAWAII
FACILITY MANAGEMENT OFFICE

HAWAII ARMY NATIONAL GUARD
DESIGN AND PROJECT MANAGEMENT BRANCH
DEPARTMENT OF DEFENSE

BUILDING 117
KALAELOA (FORMER BARBERS POINT NAS), HAWAII

BLDG 117 WINDOW SYSTEM REPLACEMENT - BRAVO 117

OVERALL EXTERIOR ELEVATIONS

SCALE: AS NOTED

STATE JOB NO. CA-1425-C

FEDERAL PROJECT NO. 15140059

SHEET 25 OF 35

A-200

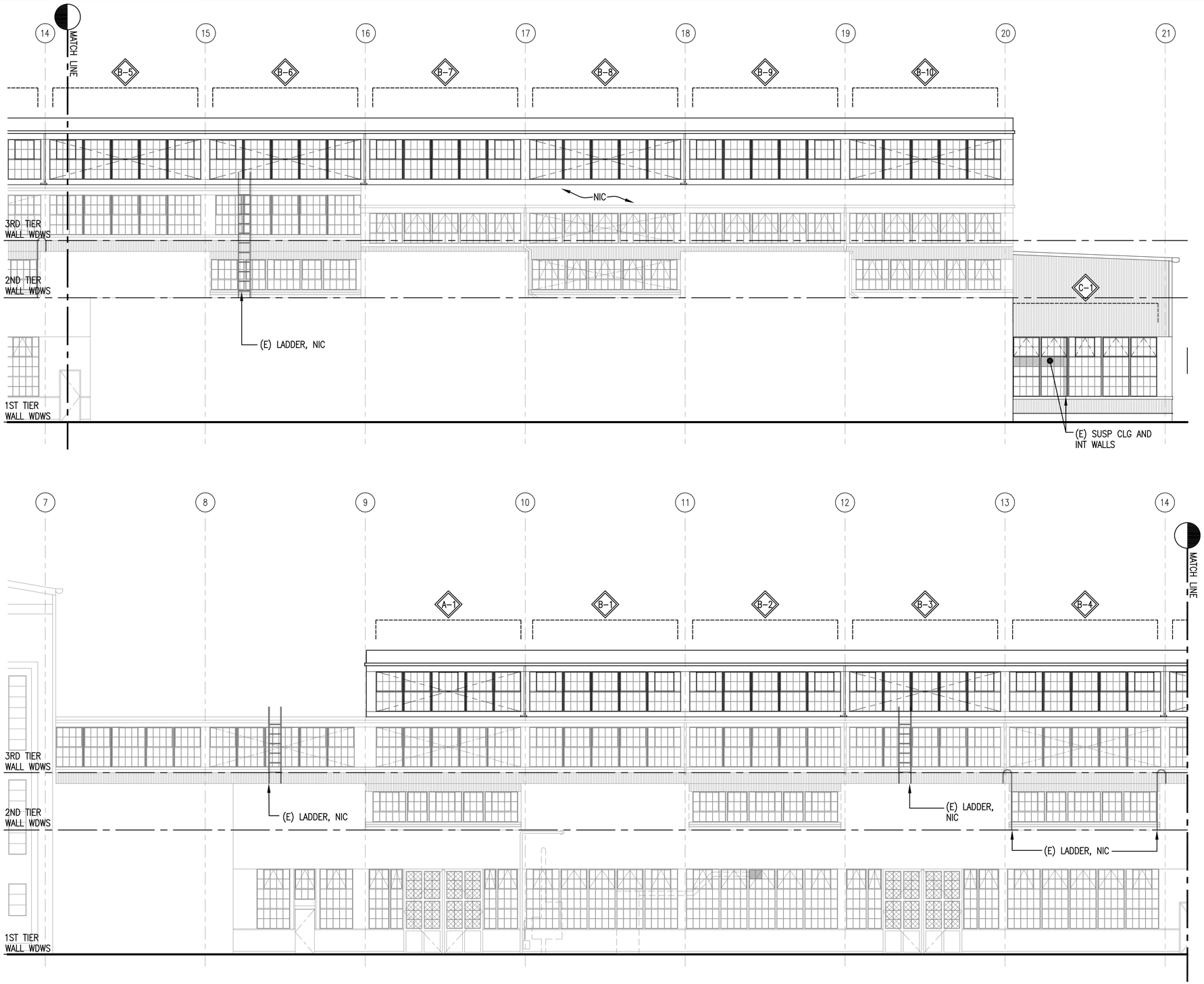

PARTIAL EAST ELEVATIONS

SCALE: 1/8" = 1'-0"

0 4' 8' 16'

A1

LEGEND

- EXISTING INTERIOR CROSS-BRACING TO REMAIN. SEE STRUCT DWGS.
- ATFP COMPLIANT GLAZING. SEE DET C1/A-503.
- EXISTING INTERIOR WALLS OR DROPPED CEILING – SEE FLOOR PLANS. COORDINATE WITH USERS ON REMOVAL AND RECONSTRUCTION OF OBSTRUCTIONS AS REQD FOR WDW INSTALLATION. SEE DETAILS C2/A-502 AND C2/A-503.
- FURNISH AND INSTALL MULLIONS – SEE STRUCT DRAWINGS
- NOT IN PROJECT SCOPE
- A-1 WDW GROUP, SEE SHT A-601 FOR WDW GROUP TYPE
- F5-4 WDW, SEE SEE SHT A-601 FOR WDW TYPE

GENERAL NOTES

1. SEE EMET MARCH 17, 2015 HAZARDOUS MATERIAL INSPECTION REPORT (LIMITED ASBESTOS AND LEAD PAINT SURVEY REPORT) BEFORE PROCEEDING WITH ANY DEMOLITION WORK.
2. REMOVE ALL SURFACE RUST ON METAL SURFACES, PRIME AND PAINT.
3. PAINT ALL WORK AFFECTED BY INSTALLATION OF STEEL WINDOWS. PAINT ALL EXISTING AND NEW MULLIONS TO MATCH STEEL WINDOWS.
4. DO NOT PAINT EQUIPMENT LABELS & FIRE PROTECTION EQUIPMENT UNLESS NOTED OTHERWISE.
5. REINSTALL SALVAGED EXIST SIGNAGE, COORDINATE WITH OWNERS.
6. EXISTING PENETRATIONS/OBSTRUCTIONS: COORDINATE WITH OWNERS ON RECONSTRUCTION OF EXISTING EQUIPMENT OR OBSTRUCTIONS. SEE DET B5/A-501.
7. RELOCATE EXIST CONDUIT AND PENETRATIONS THAT INTERFERE WITH OPERABLE WINDOWS – COORDINATE WITH OWNERS.
8. REINSTALL SALVAGED ROOF ACCESS LADDERS. PROVIDE NEW LADDERS AS SHOWN – SEE DET A2/A-503.
9. BOLT WDW VENTILATORS AT LOCATIONS WHERE OPERABILITY IS RESTRICTED BY INTERIOR WALLS OR SUSP CLG – CONFIRM WITH ARCHITECT.

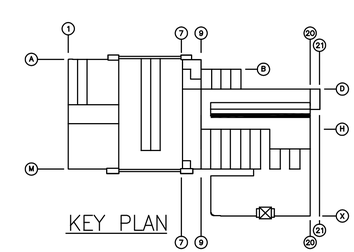

HAWAII ARMY NATIONAL GUARD

A/E INFO

I CERTIFY THAT THIS DRAWING WAS PREPARED BY ME OR UNDER MY DIRECT SUPERVISION.

BARBARA S. SHIDELER LICENSED PROFESSIONAL No. 7760 HAWAII, U.S.A.

EXPIRES APRIL 30, 2016

SEAL

SYM	DESCRIPTION	DATE	APPR

SUBMITTAL PHASE: FINAL

SUBMITTAL DATE: FEB 17, 2016

DES MYW | DRW MYW | CHK BSS

STATE OF HAWAII
FACILITY MANAGEMENT OFFICE

DEPARTMENT OF DEFENSE
DESIGN AND PROJECT MANAGEMENT BRANCH

HAWAII ARMY NATIONAL GUARD

KALAELOA (FORMER BARBERS POINT NAS), HAWAII

BUILDING 117

BLDG 117 WINDOW SYSTEM REPLACEMENT - BRAVO 117

PARTIAL EAST EXTERIOR ELEVATIONS

SCALE: AS NOTED

STATE JOB NO. CA-1425-C

FEDERAL PROJECT NO. 15140059

SHEET 26 OF 35

A-201

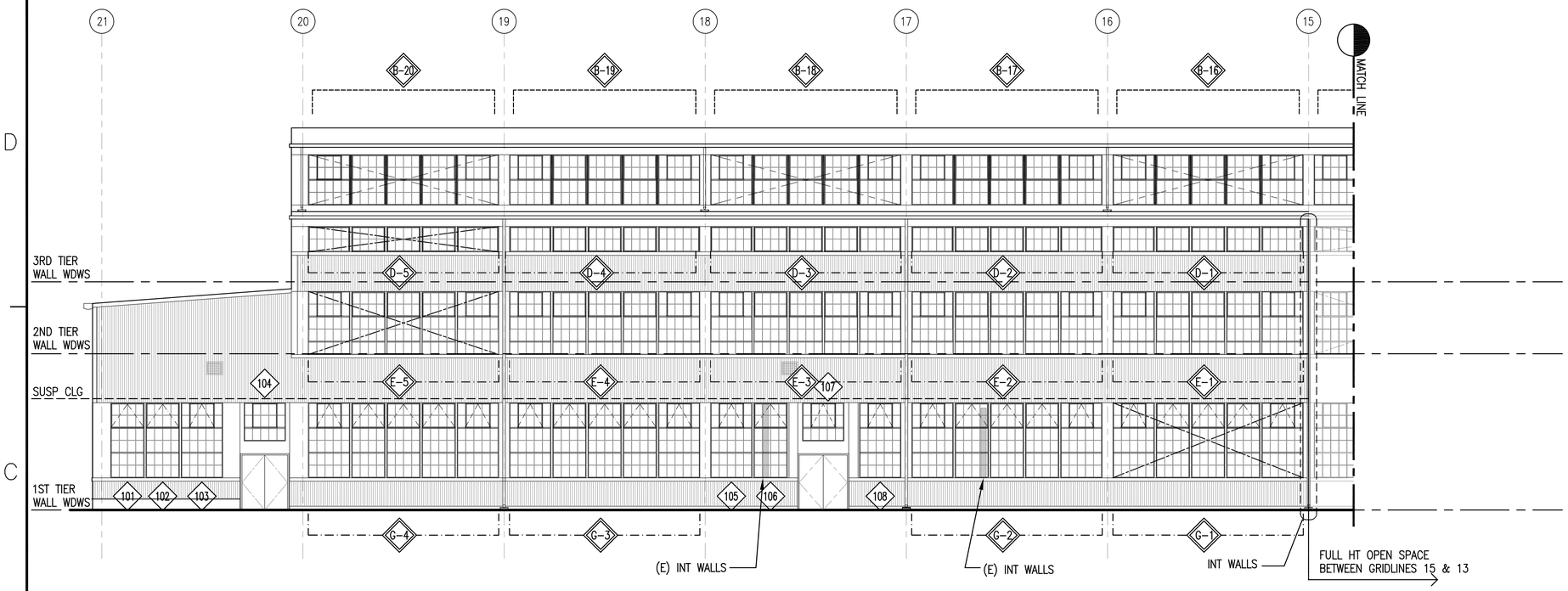

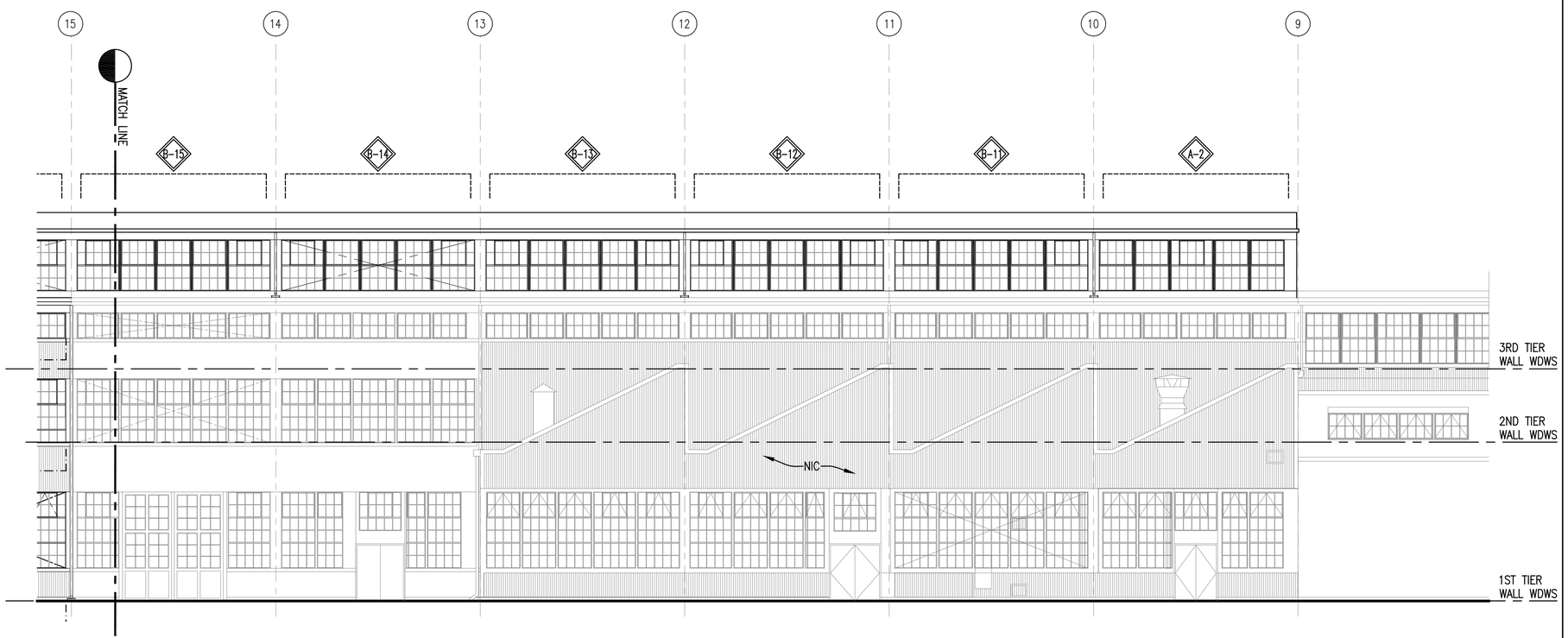

PARTIAL WEST ELEVATIONS

SCALE: 1/8" = 1'-0"

0 4' 8' 16'

A1

LEGEND

- EXISTING INTERIOR CROSS-BRACING TO REMAIN. SEE STRUCT DWGS.
- ATFP COMPLIANT GLAZING. SEE DET C1/A-503.
- EXISTING INTERIOR WALLS OR DROPPED CEILING – SEE FLOOR PLANS. COORDINATE WITH USERS ON REMOVAL AND RECONSTRUCTION OF OBSTRUCTIONS AS REQD FOR WDW INSTALLATION. SEE DETAILS C2/A-502 AND C2/A-503.
- FURNISH AND INSTALL MULLIONS – SEE STRUCT DRAWINGS
- NOT IN PROJECT SCOPE
- A-1 WDW GROUP, SEE SHT A-601 FOR WDW GROUP TYPE
- E5-4 WDW, SEE SEE SHT A-601 FOR WDW TYPE

GENERAL NOTES

1. SEE EMET MARCH 17, 2015 HAZARDOUS MATERIAL INSPECTION REPORT (LIMITED ASBESTOS AND LEAD PAINT SURVEY REPORT) BEFORE PROCEEDING WITH ANY DEMOLITION WORK.
2. REMOVE ALL SURFACE RUST ON METAL SURFACES, PRIME AND PAINT.
3. PAINT ALL WORK AFFECTED BY INSTALLATION OF STEEL WINDOWS. PAINT ALL EXISTING AND NEW MULLIONS TO MATCH STEEL WINDOWS.
4. DO NOT PAINT EQUIPMENT LABELS & FIRE PROTECTION EQUIPMENT UNLESS NOTED OTHERWISE.
5. REINSTALL SALVAGED EXIST SIGNAGE, COORDINATE WITH OWNERS.
6. EXISTING PENETRATIONS/OBSTRUCTIONS: COORDINATE WITH OWNERS ON RECONSTRUCTION OF EXISTING EQUIPMENT OR OBSTRUCTIONS. SEE DET B5/A-501.
7. RELOCATE EXIST CONDUIT AND PENETRATIONS THAT INTERFERE WITH OPERABLE WINDOWS – COORDINATE WITH OWNERS.
8. REINSTALL SALVAGED ROOF ACCESS LADDERS. PROVIDE NEW LADDERS AS SHOWN – SEE DET A2/A-503.
9. BOLT WDW VENTILATORS AT LOCATIONS WHERE OPERABILITY IS RESTRICTED BY INTERIOR WALLS OR SUSP CLG – CONFIRM WITH ARCHITECT.

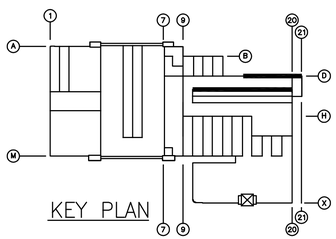

KEY PLAN

A/E INFO

I CERTIFY THAT THIS DRAWING WAS PREPARED BY ME OR UNDER MY DIRECT SUPERVISION.

BARBARA S. SHIDELER LICENSED PROFESSIONAL No. 7760 HAWAII, U.S.A.

EXPIRES APRIL 30, 2016 SEAL

SYM	DESCRIPTION	DATE	APPR

SUBMITTAL PHASE: FINAL

SUBMITTAL DATE: FEB 17, 2016

DES MYW DRW MYW CHK BSS

STATE OF HAWAII FACILITY MANAGEMENT OFFICE

DEPARTMENT OF DEFENSE DESIGN AND PROJECT MANAGEMENT BRANCH

HAWAII ARMY NATIONAL GUARD

BUILDING 117 KALAELOA (FORMER BARBERS POINT NAS), HAWAII

BLDG 117 WINDOW SYSTEM REPLACEMENT - BRAVO 117

PARTIAL WEST EXTERIOR ELEVATIONS

SCALE: AS NOTED

STATE JOB NO. CA-1425-C

FEDERAL PROJECT NO. 15140059

SHEET 27 OF 35

A-202

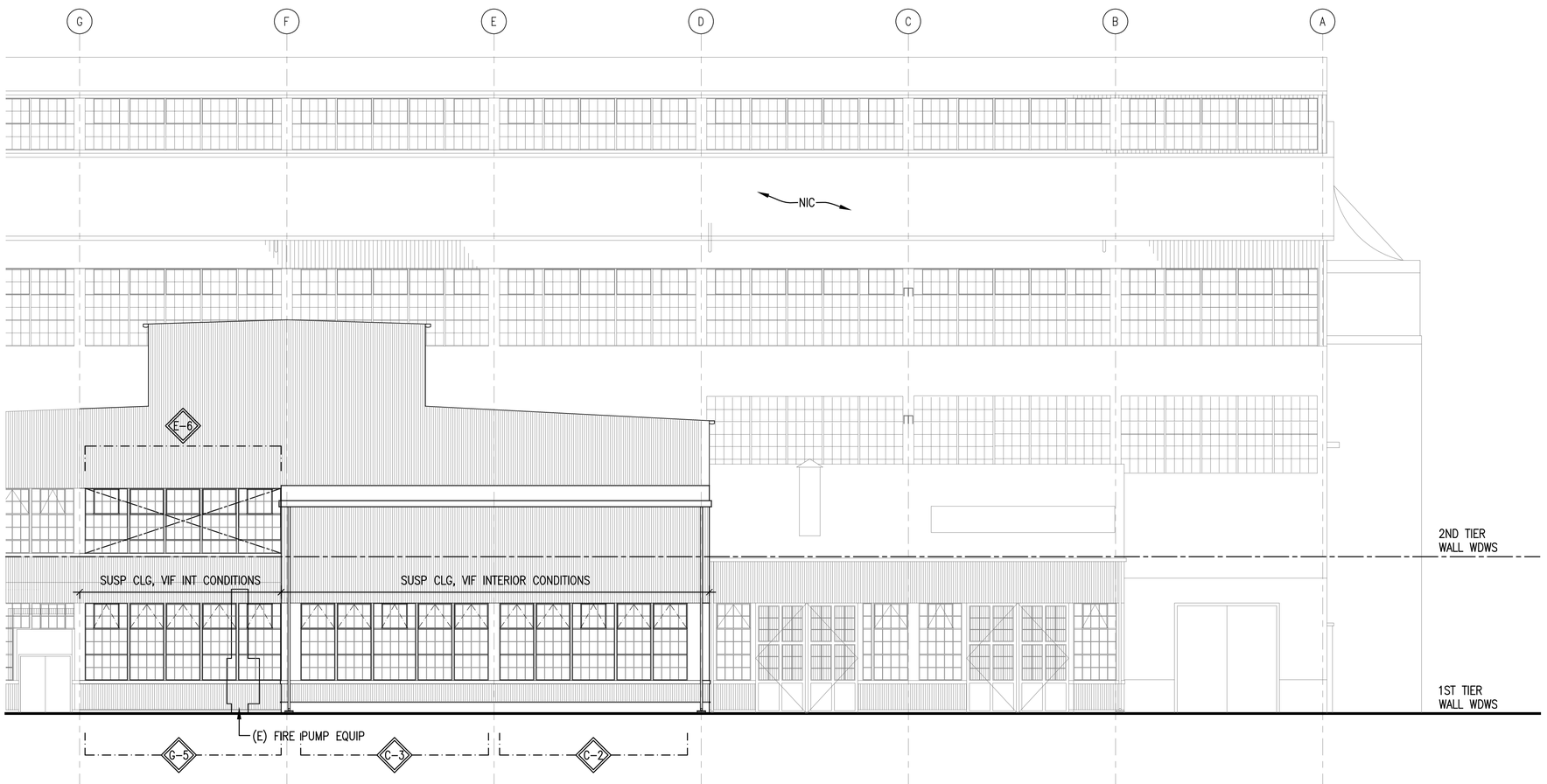

PARTIAL NORTH ELEVATIONS

SCALE: 1/8" = 1'-0"

0 4' 8' 16'

A1

LEGEND

- EXISTING INTERIOR CROSS-BRACING TO REMAIN. SEE STRUCT DWGS.
- ATFP COMPLIANT GLAZING. SEE DET C1/A-503.
- EXISTING INTERIOR WALLS OR DROPPED CEILING – SEE FLOOR PLANS. COORDINATE WITH USERS ON REMOVAL AND RECONSTRUCTION OF OBSTRUCTIONS AS REQD FOR WDW INSTALLATION. SEE DETAILS C2/A-502 AND C2/A-503.
- FURNISH AND INSTALL MULLIONS – SEE STRUCT DRAWINGS
- NOT IN PROJECT SCOPE
- A-7 WDW GROUP, SEE SHT A-601 FOR WDW GROUP TYPE
- F5-4 WDW, SEE SEE SHT A-601 FOR WDW TYPE

GENERAL NOTES

1. SEE EMET MARCH 17, 2015 HAZARDOUS MATERIAL INSPECTION REPORT (LIMITED ASBESTOS AND LEAD PAINT SURVEY REPORT) BEFORE PROCEEDING WITH ANY DEMOLITION WORK.
2. REMOVE ALL SURFACE RUST ON METAL SURFACES, PRIME AND PAINT.
3. PAINT ALL WORK AFFECTED BY INSTALLATION OF STEEL WINDOWS. PAINT ALL EXISTING AND NEW MULLIONS TO MATCH STEEL WINDOWS.
4. DO NOT PAINT EQUIPMENT LABELS & FIRE PROTECTION EQUIPMENT UNLESS NOTED OTHERWISE.
5. REINSTALL SALVAGED EXIST SIGNAGE, COORDINATE WITH OWNERS.
6. EXISTING PENETRATIONS/OBSTRUCTIONS: COORDINATE WITH OWNERS ON RECONSTRUCTION OF EXISTING EQUIPMENT OR OBSTRUCTIONS. SEE DET B5/A-501.
7. RELOCATE EXIST CONDUIT AND PENETRATIONS THAT INTERFERE WITH OPERABLE WINDOWS – COORDINATE WITH OWNERS.
8. REINSTALL SALVAGED ROOF ACCESS LADDERS. PROVIDE NEW LADDERS AS SHOWN – SEE DET A2/A-503.
9. BOLT WDW VENTILATORS AT LOCATIONS WHERE OPERABILITY IS RESTRICTED BY INTERIOR WALLS OR SUSP CLG – CONFIRM WITH ARCHITECT.

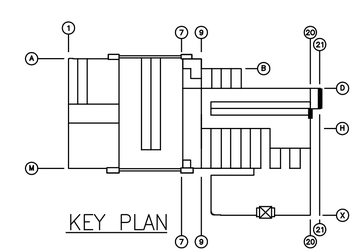

KEY PLAN

HAWAII ARMY NATIONAL GUARD

A/E INFO

I CERTIFY THAT THIS DRAWING WAS PREPARED BY ME OR UNDER MY DIRECT SUPERVISION.

BARBARA S. SHIDELER, LICENSED PROFESSIONAL No. 7760, HAWAII, U.S.A.

EXPIRES APRIL 30, 2016

SEAL

SYM	DESCRIPTION	DATE	APPR

SUBMITTAL PHASE: FINAL

SUBMITTAL DATE: FEB 17, 2016

DES MYW | DRW MYW | CHK BSS

STATE OF HAWAII
FACILITY MANAGEMENT OFFICE

DEPARTMENT OF DEFENSE
DESIGN AND PROJECT MANAGEMENT BRANCH

KALAELOA (FORMER BARBERS POINT NAS), HAWAII

BUILDING 117

BLDG 117 WINDOW SYSTEM REPLACEMENT - BRAVO 117

PARTIAL NORTH EXTERIOR ELEVATIONS

SCALE: AS NOTED

STATE JOB NO. CA-1425-C

FEDERAL PROJECT NO. 15140059

SHEET 28 OF 35

A-203

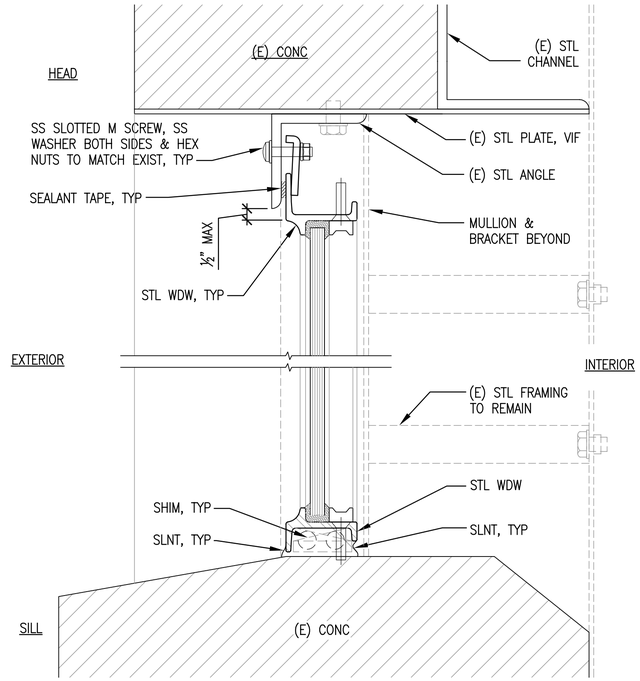

HEAD & SILL: CONC SURROUND @ EAST CORRIDOR — C1

6" = 1' – 0"

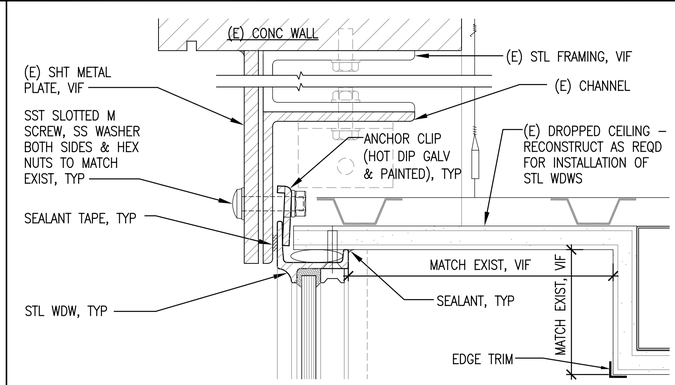

HEAD: CONC SURROUND & SUSP CLG — D2

6" = 1' – 0"

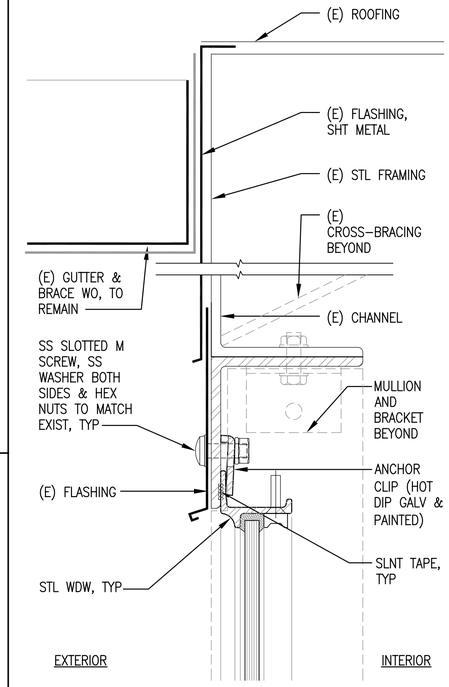

HEAD: SHT MTL W/ GUTTER WO — C4

6" = 1' – 0"

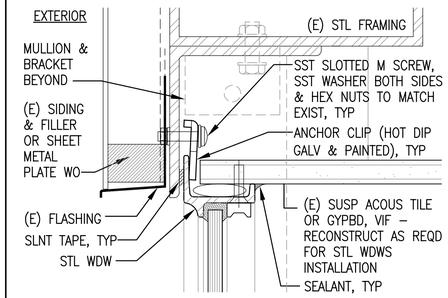

HEAD: SUSP CLG — D5

6" = 1' – 0"

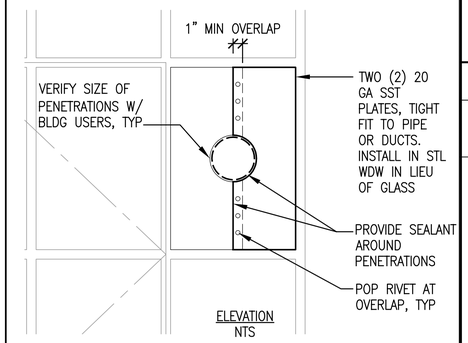

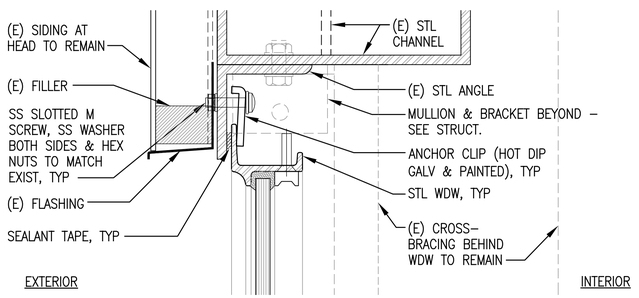

HEAD: TYPICAL STL WDW SECTION — B1

6" = 1' – 0"

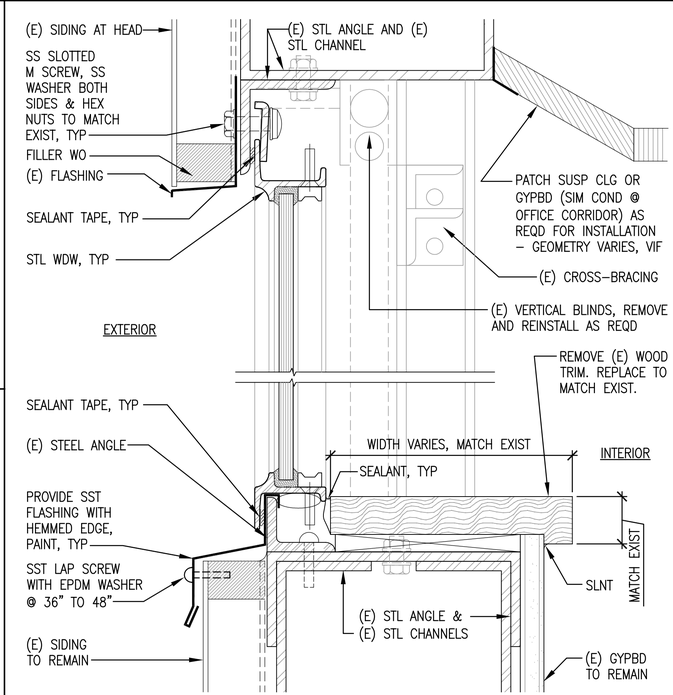

OFFICES - BUILT-UP CONDITIONS @ HEAD & SILL — A2

6" = 1' – 0"

A–603

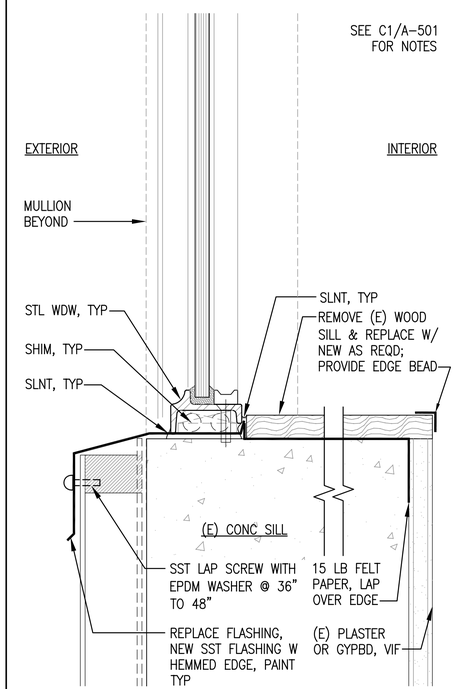

CONC WDW SILL — A4

6" = 1' – 0"

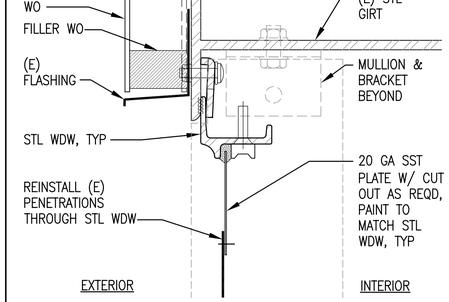

STL PLATE FOR WDW PANE — B5

6" = 1' – 0"

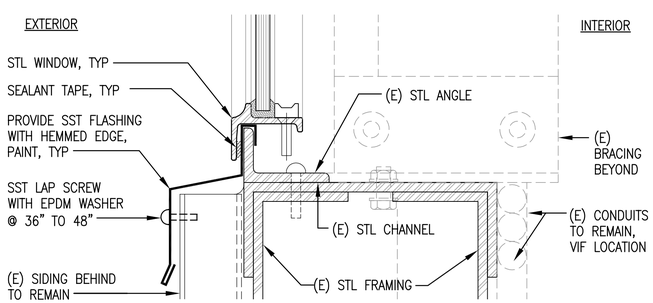

SILL: TYPICAL STL WDW SECTION — A1

6" = 1' – 0"

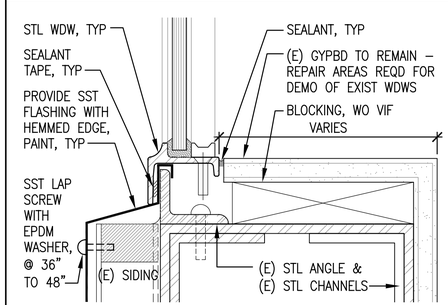

SILL: STL FRAME W/ GYPBD — A5

6" = 1' – 0"

A/E INFO

I CERTIFY THAT THIS DRAWING WAS PREPARED BY ME OR UNDER MY DIRECT SUPERVISION.

BARBARA S. SHIDELER LICENSED PROFESSIONAL No. 7760 HAWAII, U.S.A.

EXPIRES APRIL 30, 2016 SEAL

SYM	DESCRIPTION	DATE	APPR

SUBMITTAL PHASE: FINAL

SUBMITTAL DATE: FEB 17, 2016

DES MYW DRW MYW CHK BSS

DEPARTMENT OF DEFENSE
DESIGN AND PROJECT MANAGEMENT BRANCH
HAWAII ARMY NATIONAL GUARD
KALAELOA (FORMER BARBERS POINT NAS), HAWAII
STATE OF HAWAII
FACILITY MANAGEMENT OFFICE
BUILDING 117
BLDG 117 WINDOW SYSTEM REPLACEMENT - BRAVO 117
WINDOW DETAILS

SCALE: AS NOTED

STATE JOB NO. CA–1425–C

FEDERAL PROJECT NO. 15140059

SHEET 29 OF 35

A-501

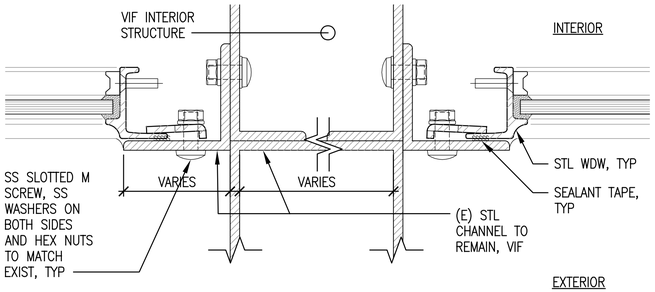

JAMB: EXIST COLUMN CHANNEL @ DOOR FRAMES — D1

6" = 1' – 0"

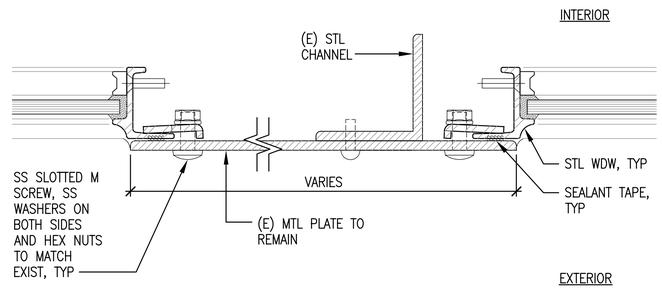

JAMB: MTL PLATES @ INNER BAYS — D2

6" = 1' – 0"

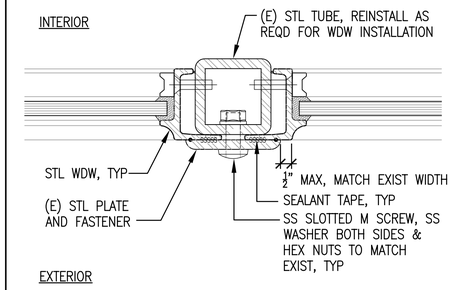

JAMB: MTL TUBE — D5

6" = 1' – 0"

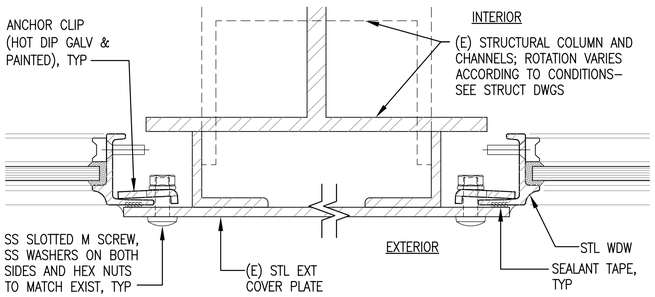

JAMB: EXIST COLUMN — C1

6" = 1' – 0"

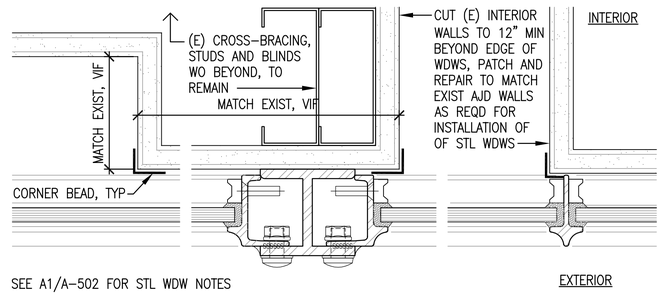

SEE A1/A–502 FOR STL WDW NOTES

PLAN: INTERIOR WALLS ADJ TO WDWS — C2

6" = 1' – 0"

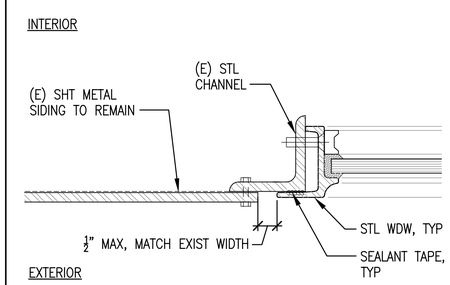

JAMB: FIXED WDWS @ 1ST TIER — C5

6" = 1' – 0"

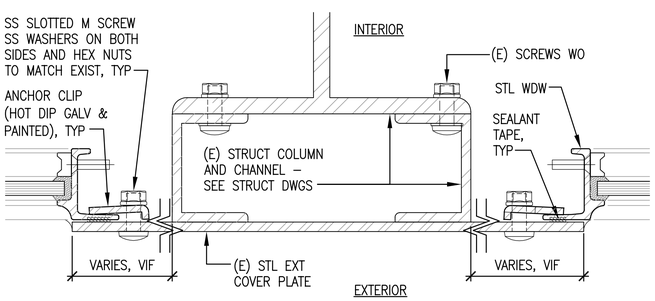

JAMB: EXIST COLUMN (W10 OR W8 WHERE OCCURS) — B1

6" = 1' – 0" A–603

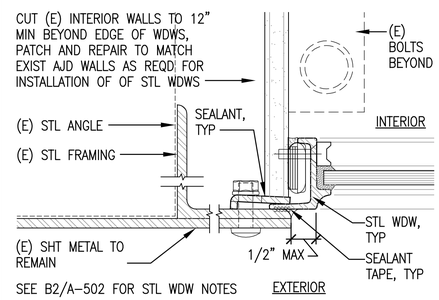

SEE B2/A–502 FOR STL WDW NOTES

JAMB: BUILT-UP INT CONDITIONS — B4

6" = 1' – 0" A–603

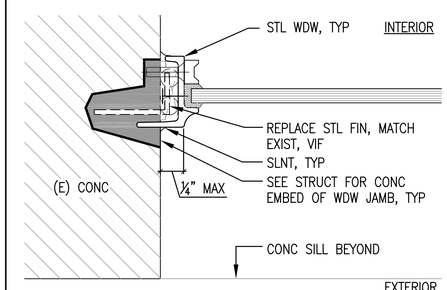

JAMB: CONC @ EAST CORRIDOR — B5

6" = 1' – 0"

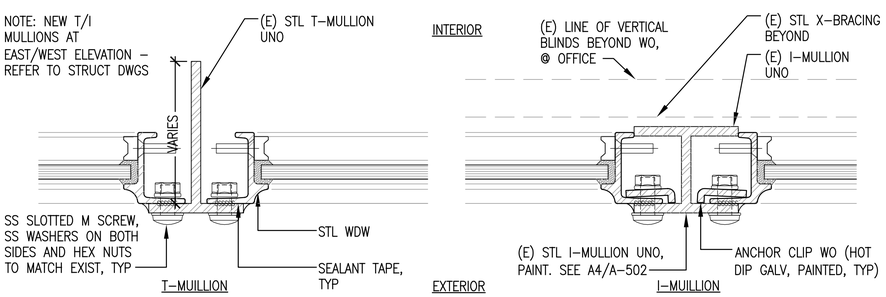

EXIST MULLION JAMB (T OR I) — A1

6" = 1' – 0"

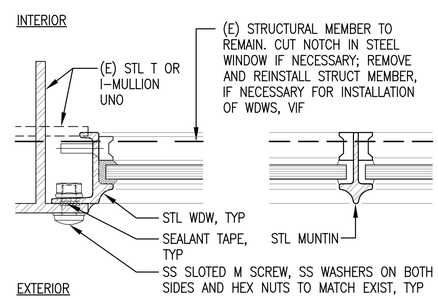

T OR I-MULLION JAMB NOTCH — A3

6" = 1' – 0"

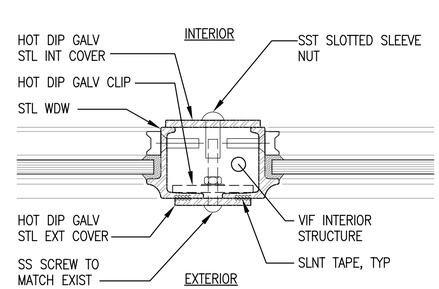

JAMB: MULLION PLATE DETAIL — A4

6" = 1' – 0"

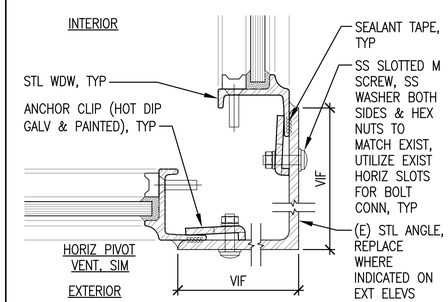

JAMB: CORNER CONNECTIONS — A5

6" = 1' – 0"

I CERTIFY THAT THIS DRAWING WAS PREPARED BY ME OR UNDER MY DIRECT SUPERVISION.

BARBARA S. SHIDELER, LICENSED PROFESSIONAL No. 7760, HAWAII, U.S.A.

EXPIRES APRIL 30, 2016

SYM	DESCRIPTION	DATE	APPR

SUBMITTAL PHASE: FINAL

SUBMITTAL DATE: FEB 17, 2016

DES MYW | DRW MYW | CHK BSS

STATE OF HAWAII — FACILITY MANAGEMENT OFFICE

HAWAII ARMY NATIONAL GUARD — DEPARTMENT OF DEFENSE — DESIGN AND PROJECT MANAGEMENT BRANCH

BUILDING 117 — KALAELOA (FORMER BARBERS POINT NAS), HAWAII

BLDG 117 WINDOW SYSTEM REPLACEMENT - BRAVO 117

WINDOW DETAILS

SCALE: AS NOTED

STATE JOB NO. CA–1425–C

FEDERAL PROJECT NO. 15140059

SHEET 30 OF 35

A-502

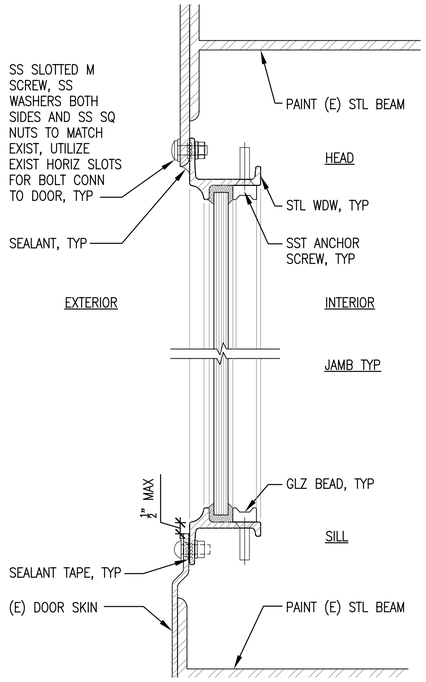

FIXED WDWS IN DOORS (C1)

6" = 1' – 0"

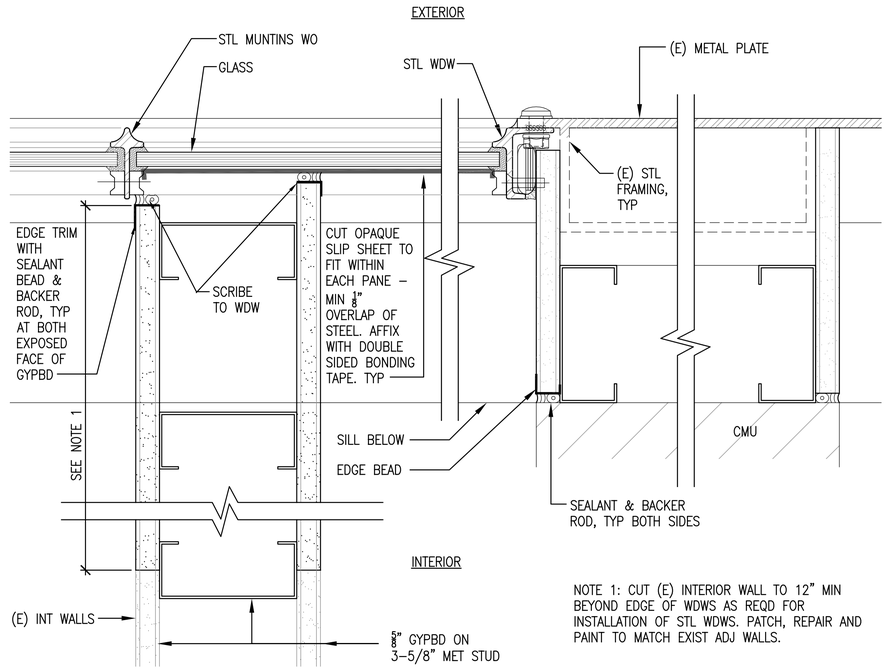

NOTE 1: CUT (E) INTERIOR WALL TO 12" MIN BEYOND EDGE OF WDWS AS REQD FOR INSTALLATION OF STL WDWS. PATCH, REPAIR AND PAINT TO MATCH EXIST ADJ WALLS.

JAMB: INTERIOR WALL CLOSURE (C2)

6" = 1' – 0"

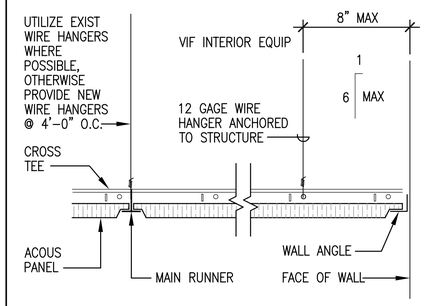

SUSP ACOUS CEILING, TYP (C4)

SCALE: 3" = 1' – 0"

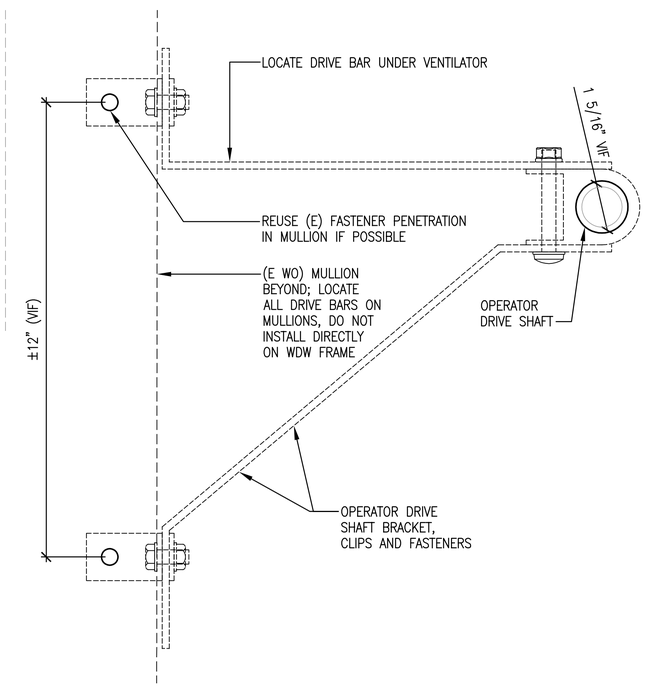

DRIVE BAR GUIDE DETAIL (A1)

6" = 1' – 0"

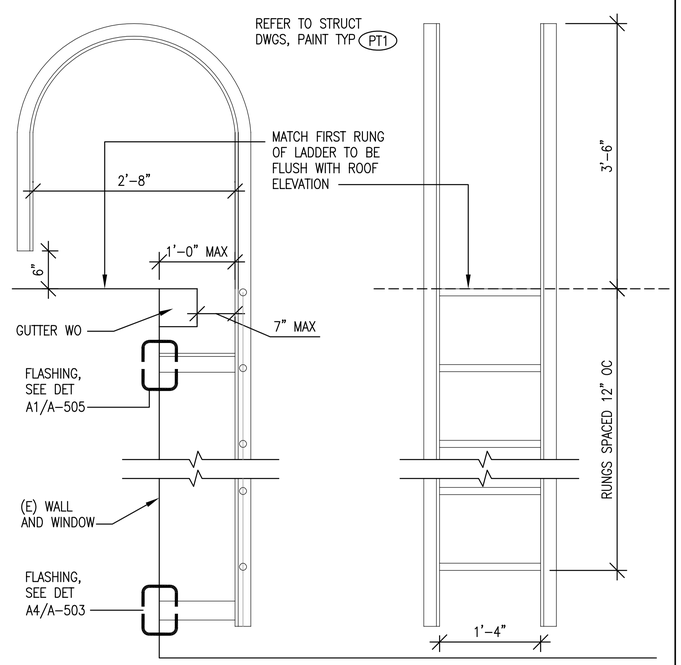

METAL ROOF LADDER (A2)

1" = 1' – 0"

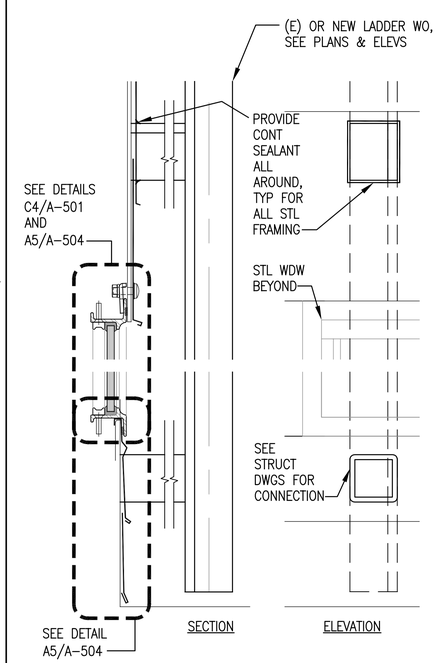

ROOF LADDER FLASHING (A4)

SCALE: 3" = 1' – 0"

A/E INFO

I CERTIFY THAT THIS DRAWING WAS PREPARED BY ME OR UNDER MY DIRECT SUPERVISION.

BARBARA S. SHIDELER, LICENSED PROFESSIONAL ENGINEER, No. 7760, HAWAII, U.S.A.

EXPIRES APRIL 30, 2016 SEAL

SYM	DESCRIPTION	DATE	APPR

SUBMITTAL PHASE: FINAL

SUBMITTAL DATE: FEB 17, 2016

DES: MYW DRW: MYW CHK: BSS

STATE OF HAWAII
FACILITY MANAGEMENT OFFICE

HAWAII ARMY NATIONAL GUARD
DEPARTMENT OF DEFENSE
DESIGN AND PROJECT MANAGEMENT BRANCH

BUILDING 117

KALAELOA (FORMER BARBERS POINT NAS), HAWAII

BLDG 117 WINDOW SYSTEM REPLACEMENT - BRAVO 117

DETAILS

SCALE: AS NOTED

STATE JOB NO. CA-1425-C

FEDERAL PROJECT NO. 15140059

SHEET 31 OF 35

A-503

DO NOT PAINT FACTORY FINISH WINDOW COMPONENTS.

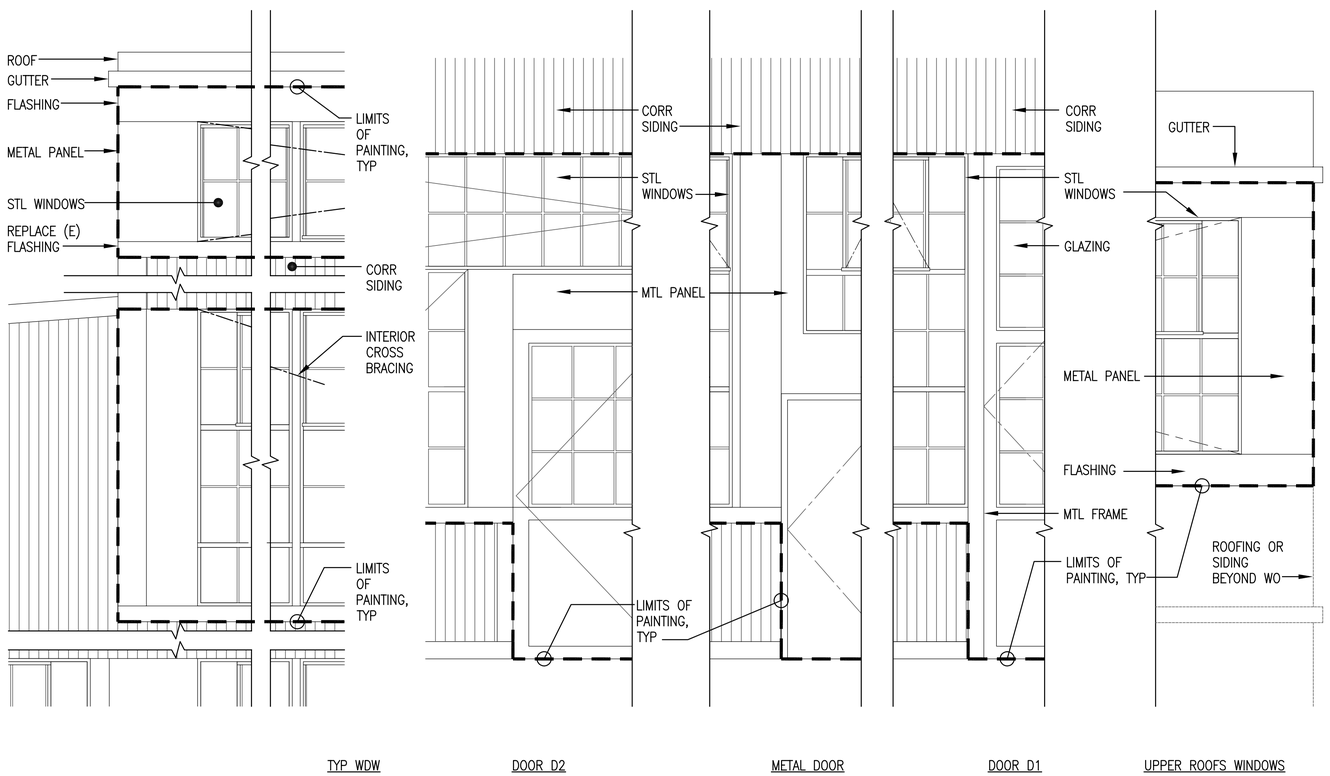

PAINT SCOPE @ WINDOWS AND DOORS (A2)

1/2" = 1' – 0"

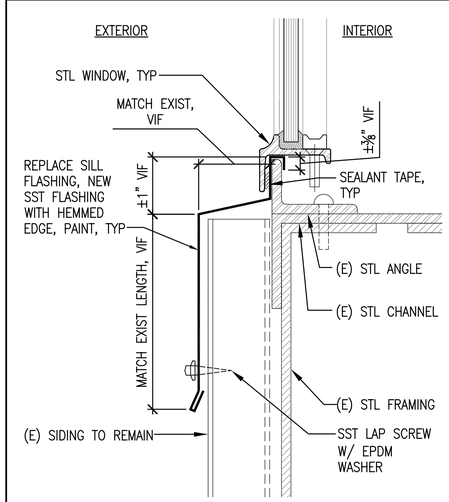

SILL FLASHING @ METAL SIDING (A4)

6" = 1' – 0"

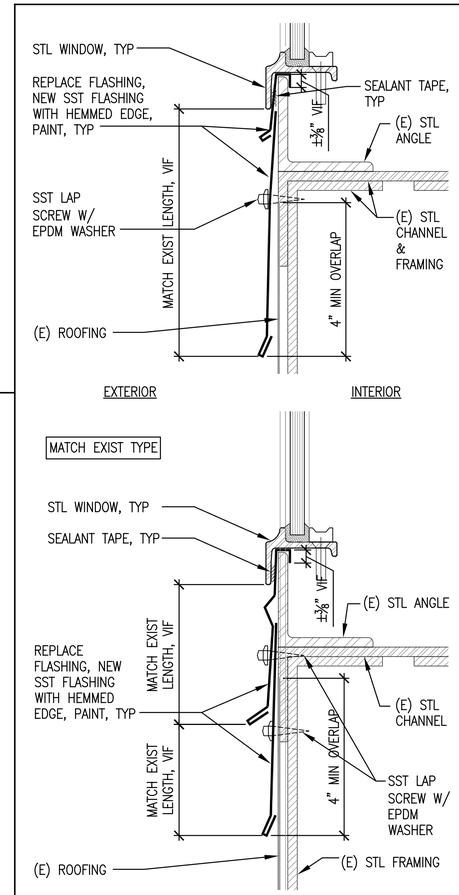

SILL FLASHING @ UPPER ROOFS (A5)

6" = 1' – 0"

A/E INFO

I CERTIFY THAT THIS DRAWING WAS PREPARED BY ME OR UNDER MY DIRECT SUPERVISION.

BARBARA S. SHIDELER, LICENSED PROFESSIONAL No. 7760, HAWAII, U.S.A.

EXPIRES APRIL 30, 2016 SEAL

STM	DESCRIPTION	DATE	APPR

SUBMITTAL PHASE: FINAL

SUBMITTAL DATE: FEB 17, 2016

DES MYW | DRW MYW | CHK BSS

STATE OF HAWAII — FACILITY MANAGEMENT OFFICE

HAWAII ARMY NATIONAL GUARD — DEPARTMENT OF DEFENSE — DESIGN AND PROJECT MANAGEMENT BRANCH

BUILDING 117 — KALAELOA (FORMER BARBERS POINT NAS), HAWAII

BLDG 117 WINDOW SYSTEM REPLACEMENT - BRAVO 117

DETAILS

SCALE: AS NOTED

STATE JOB NO. CA–1425–C

FEDERAL PROJECT NO. 15140059

SHEET 32 OF 35

A-504

INDIVIDUAL WINDOW TYPES

SCALE: 1/4" = 1-0" 0 2' 4' 8'

SERIES 4

OPERABLE
4 LITES WIDTH
HEIGHT VARIES

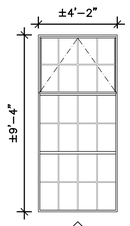

4-6

SERIES 5

OPERABLE
5 LITES WIDTH
HEIGHT VARIES

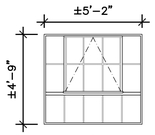

5-3

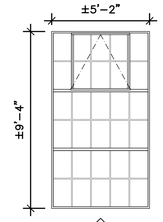

5-6

SERIES F (FIXED)

FIXED
OVERALL HEIGHT AND WIDTH VARIES

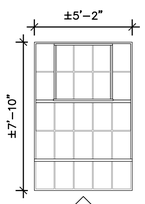

F5-5

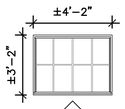

F4-2

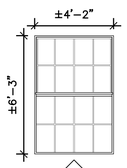

F4-4

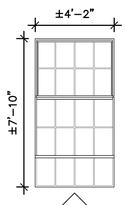

F4-5

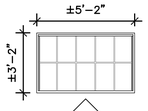

F5-2

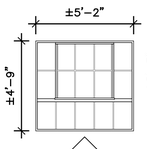

F5-3

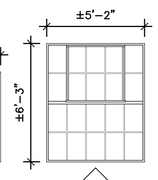

F5-4

WINDOW GROUP TYPES

SCALE: 1/4" = 1-0" 0 2' 4' 8'

GROUP A

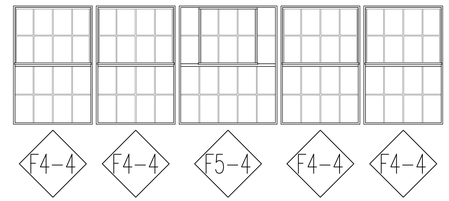

GROUP D

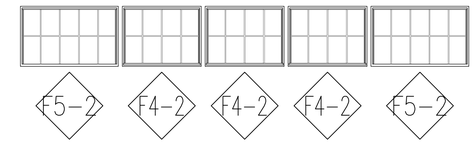

GROUP B

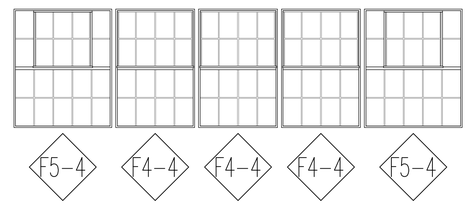

GROUP E

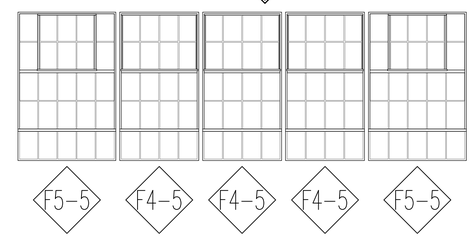

GROUP C

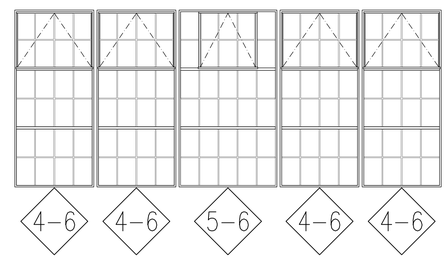

GROUP G

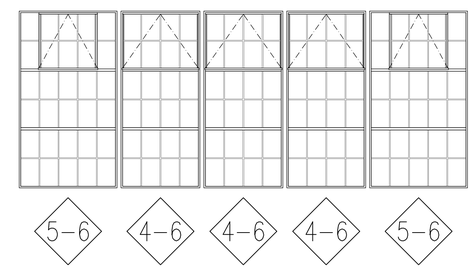

WINDOW LEGEND

WINDOW NOTES

1. ALL WINDOWS SHALL MATCH EXISTING OPERATION AND CONFIGURATION UNO.
2. WINDOW TYPES ARE REPRESENTATIVE OF THE WINDOW'S OPERATION AND CONFIGURATION. FOR WINDOW DETAILS, REFER TO SHEETS A-602 AND A-603 WINDOW SCHEDULES.

HAWAII ARMY NATIONAL GUARD

A/E INFO

I CERTIFY THAT THIS DRAWING WAS PREPARED BY ME OR UNDER MY DIRECT SUPERVISION.

BARBARA S. SHIDELER LICENSED PROFESSIONAL No. 7760 HAWAII, U.S.A.

EXPIRES APRIL 30, 2016

SEAL

SYM	DESCRIPTION	DATE	APPR

SUBMITTAL PHASE: FINAL

SUBMITTAL DATE: FEB 17, 2016

DES BSS | DRW MYW | CHK WL

STATE OF HAWAII
FACILITY MANAGEMENT OFFICE
BUILDING 117

DEPARTMENT OF DEFENSE
HAWAII ARMY NATIONAL GUARD
DESIGN AND PROJECT MANAGEMENT BRANCH

KALAELOA (FORMER BARBERS POINT NAS), HAWAII
BLDG 117 WINDOW SYSTEM REPLACEMENT - BRAVO 117

WINDOW TYPES, WINDOW GROUP TYPES & WINDOW LEGEND

SCALE: AS NOTED

STATE JOB NO. CA-1425-C

FEDERAL PROJECT NO. 15140059

SHEET 33 OF 35

A-601

WINDOW SCHEDULE

WDW GROUP/ WDW NO	WDW GROUP TYPE	WDW TYPE	ELEV SHEET REFERENCE	SEE SHT A-603 GLAZING	OPERATION	OPERATOR TYPE/ DETAIL	DETAIL * *SEE TYPICAL TYPICAL WINDOW DETAIL SECTIONS ON A-603 HEAD	JAMB	SILL	FLASHING	SPECIAL CONDITIONS & WINDOW OPERATIONS
A-1	A		A-201	LG	FIXED	FIXED	SEE WIINDOW GROUP DETAIL SCHEDULE ON SHT A-603				REPLACE MULLIONS – SEE STRUCT DWGS. SUSPENDED CEILING, LIMITED ACCESS – VIF INTERIOR CONDITIONS
A-2	A		A-202	LG	FIXED	FIXED	SEE WIINDOW GROUP DETAIL SCHEDULE ON SHT A-603				REPLACE MULLIONS – SEE STRUCT DWGS. SUSPENDED CEILING, LIMITED ACCESS – VIF INTERIOR CONDITIONS
B-1	B		A-201	LG	FIXED	FIXED	SEE WIINDOW GROUP DETAIL SCHEDULE ON SHT A-603				REPLACE MULLIONS – SEE STRUCT DWGS. SUSPENDED CEILING, LIMITED ACCESS – VIF INTERIOR CONDITIONS
B-2	B		A-201	LG	FIXED	FIXED	SEE WIINDOW GROUP DETAIL SCHEDULE ON SHT A-603				REPLACE MULLIONS – SEE STRUCT DWGS. SUSPENDED CEILING, LIMITED ACCESS – VIF INTERIOR CONDITIONS
B-3	B		A-201	LG	FIXED	FIXED	SEE WIINDOW GROUP DETAIL SCHEDULE ON SHT A-603				REPLACE MULLIONS – SEE STRUCT DWGS. SUSPENDED CEILING, LIMITED ACCESS – VIF INTERIOR CONDITIONS
B-4	B		A-201	LG	FIXED	FIXED	SEE WIINDOW GROUP DETAIL SCHEDULE ON SHT A-603				REPLACE MULLIONS – SEE STRUCT DWGS. SUSPENDED CEILING, LIMITED ACCESS – VIF INTERIOR CONDITIONS
B-5	B		A-201	LG	FIXED	FIXED	SEE WIINDOW GROUP DETAIL SCHEDULE ON SHT A-603				REPLACE MULLIONS – SEE STRUCT DWGS. SUSPENDED CEILING, LIMITED ACCESS – VIF INTERIOR CONDITIONS
B-6	B		A-201	LG	FIXED	FIXED	SEE WIINDOW GROUP DETAIL SCHEDULE ON SHT A-603				REPLACE MULLIONS – SEE STRUCT DWGS. SUSPENDED CEILING, LIMITED ACCESS – VIF INTERIOR CONDITIONS
B-7	B		A-201	LG	FIXED	FIXED	SEE WIINDOW GROUP DETAIL SCHEDULE ON SHT A-603				REPLACE MULLIONS – SEE STRUCT DWGS. SUSPENDED CEILING, LIMITED ACCESS – VIF INTERIOR CONDITIONS
B-8	B		A-201	LG	FIXED	FIXED	SEE WIINDOW GROUP DETAIL SCHEDULE ON SHT A-603				REPLACE MULLIONS – SEE STRUCT DWGS. SUSPENDED CEILING, LIMITED ACCESS – VIF INTERIOR CONDITIONS
B-9	B		A-201	LG	FIXED	FIXED	SEE WIINDOW GROUP DETAIL SCHEDULE ON SHT A-603				REPLACE MULLIONS – SEE STRUCT DWGS. SUSPENDED CEILING, LIMITED ACCESS – VIF INTERIOR CONDITIONS
B-10	B		A-201	LG	FIXED	FIXED	SEE WIINDOW GROUP DETAIL SCHEDULE ON SHT A-603				REPLACE MULLIONS – SEE STRUCT DWGS. SUSPENDED CEILING, LIMITED ACCESS – VIF INTERIOR CONDITIONS
B-11	B		A-202	LG	FIXED	FIXED	SEE WIINDOW GROUP DETAIL SCHEDULE ON SHT A-603				REPLACE MULLIONS – SEE STRUCT DWGS. SUSPENDED CEILING, LIMITED ACCESS – VIF INTERIOR CONDITIONS
B-12	B		A-202	LG	FIXED	FIXED	SEE WIINDOW GROUP DETAIL SCHEDULE ON SHT A-603				REPLACE MULLIONS – SEE STRUCT DWGS. SUSPENDED CEILING, LIMITED ACCESS – VIF INTERIOR CONDITIONS
B-13	B		A-202	LG	FIXED	FIXED	SEE WIINDOW GROUP DETAIL SCHEDULE ON SHT A-603				REPLACE MULLIONS – SEE STRUCT DWGS. SUSPENDED CEILING, LIMITED ACCESS – VIF INTERIOR CONDITIONS
B-14	B		A-202	LG	FIXED	FIXED	SEE WIINDOW GROUP DETAIL SCHEDULE ON SHT A-603				REPLACE MULLIONS – SEE STRUCT DWGS. SUSPENDED CEILING, LIMITED ACCESS – VIF INTERIOR CONDITIONS
B-15	B		A-202	LG	FIXED	FIXED	SEE WIINDOW GROUP DETAIL SCHEDULE ON SHT A-603				REPLACE MULLIONS – SEE STRUCT DWGS. SUSPENDED CEILING, LIMITED ACCESS – VIF INTERIOR CONDITIONS
B-16	B		A-202	LG	FIXED	FIXED	SEE WIINDOW GROUP DETAIL SCHEDULE ON SHT A-603				REPLACE MULLIONS – SEE STRUCT DWGS. SUSPENDED CEILING, LIMITED ACCESS – VIF INTERIOR CONDITIONS
B-17	B		A-202	LG	FIXED	FIXED	SEE WIINDOW GROUP DETAIL SCHEDULE ON SHT A-603				REPLACE MULLIONS – SEE STRUCT DWGS. SUSPENDED CEILING, LIMITED ACCESS – VIF INTERIOR CONDITIONS
B-18	B		A-202	LG	FIXED	FIXED	SEE WIINDOW GROUP DETAIL SCHEDULE ON SHT A-603				REPLACE MULLIONS – SEE STRUCT DWGS. SUSPENDED CEILING, LIMITED ACCESS – VIF INTERIOR CONDITIONS
B-19	B		A-202	LG	FIXED	FIXED	SEE WIINDOW GROUP DETAIL SCHEDULE ON SHT A-603				REPLACE MULLIONS – SEE STRUCT DWGS. SUSPENDED CEILING, LIMITED ACCESS – VIF INTERIOR CONDITIONS
B-20	B		A-202	LG	FIXED	FIXED	SEE WIINDOW GROUP DETAIL SCHEDULE ON SHT A-603				REPLACE MULLIONS – SEE STRUCT DWGS. SUSPENDED CEILING, LIMITED ACCESS – VIF INTERIOR CONDITIONS
C-1	C		A-201	LG	HP	CHAIN	SEE WIINDOW GROUP DETAIL SCHEDULE ON SHT A-603				SUSPENDED CEILING, LIMITED ACCESS – VIF INTERIOR CONDITIONS
C-2	C		A-203	LG	HP	CHAIN	SEE WIINDOW GROUP DETAIL SCHEDULE ON SHT A-603				SUSPENDED CEILING, LIMITED ACCESS – VIF INTERIOR CONDITIONS
C-3	C		A-203	LG	HP	CHAIN	SEE WIINDOW GROUP DETAIL SCHEDULE ON SHT A-603				SUSPENDED CEILING, LIMITED ACCESS – VIF INTERIOR CONDITIONS
D-1	D		A-202	LG	FIXED	FIXED	SEE WIINDOW GROUP DETAIL SCHEDULE ON SHT A-603				SUSPENDED CEILING, LIMITED ACCESS – VIF INTERIOR CONDITIONS
D-2	D		A-202	LG	FIXED	FIXED	SEE WIINDOW GROUP DETAIL SCHEDULE ON SHT A-603				SUSPENDED CEILING, LIMITED ACCESS – VIF INTERIOR CONDITIONS
D-3	D		A-202	LG	FIXED	FIXED	SEE WIINDOW GROUP DETAIL SCHEDULE ON SHT A-603				SUSPENDED CEILING, LIMITED ACCESS – VIF INTERIOR CONDITIONS
D-4	D		A-202	LG	FIXED	FIXED	SEE WIINDOW GROUP DETAIL SCHEDULE ON SHT A-603				SUSPENDED CEILING, LIMITED ACCESS – VIF INTERIOR CONDITIONS
D-5	D		A-202	LG	FIXED	FIXED	SEE WIINDOW GROUP DETAIL SCHEDULE ON SHT A-603				SUSPENDED CEILING, LIMITED ACCESS – VIF INTERIOR CONDITIONS
E-1	E		A-202	LG	FIXED	FIXED	SEE WIINDOW GROUP DETAIL SCHEDULE ON SHT A-603				SUSPENDED CEILING, LIMITED ACCESS – VIF INTERIOR CONDITIONS
E-2	E		A-202	LG	FIXED	FIXED	SEE WIINDOW GROUP DETAIL SCHEDULE ON SHT A-603				SUSPENDED CEILING, LIMITED ACCESS – VIF INTERIOR CONDITIONS
E-3	E		A-202	LG	FIXED	FIXED	SEE WIINDOW GROUP DETAIL SCHEDULE ON SHT A-603				SUSPENDED CEILING, LIMITED ACCESS – VIF INTERIOR CONDITIONS
E-4	E		A-202	LG	FIXED	FIXED	SEE WIINDOW GROUP DETAIL SCHEDULE ON SHT A-603				SUSPENDED CEILING, LIMITED ACCESS – VIF INTERIOR CONDITIONS
E-5	E		A-202	LG	FIXED	FIXED	SEE WIINDOW GROUP DETAIL SCHEDULE ON SHT A-603				SUSPENDED CEILING, LIMITED ACCESS – VIF INTERIOR CONDITIONS
E-6	E		A-203	LG	FIXED	FIXED	SEE WIINDOW GROUP DETAIL SCHEDULE ON SHT A-603				
G-1	G		A-202	LG	HP	CHAIN	SEE WIINDOW GROUP DETAIL SCHEDULE ON SHT A-603				(E) INTERIOR WALLS, BLINDS &/OR SUSP CEILING, VIF INTERIOR CONDITIONS – SEE DET C2/A-502 & C2/A-503
G-2	G		A-202	LG	HP	CHAIN	SEE WIINDOW GROUP DETAIL SCHEDULE ON SHT A-603				(E) INTERIOR WALLS, BLINDS &/OR SUSP CEILING, VIF INTERIOR CONDITIONS – SEE DET C2/A-502 & C2/A-503
G-3	G		A-202	LG	HP	CHAIN	SEE WIINDOW GROUP DETAIL SCHEDULE ON SHT A-603				(E) INTERIOR WALLS, BLINDS &/OR SUSP CEILING, VIF INTERIOR CONDITIONS – SEE DET C2/A-502 & C2/A-503
G-4	G		A-202	LG	HP	CHAIN	SEE WIINDOW GROUP DETAIL SCHEDULE ON SHT A-603				(E) INTERIOR WALLS, BLINDS &/OR SUSP CEILING, VIF INTERIOR CONDITIONS – SEE DET C2/A-502 & C2/A-503
G-5	G		A-203	LG	HP	CHAIN	SEE WIINDOW GROUP DETAIL SCHEDULE ON SHT A-603				(E) INTERIOR WALLS, BLINDS &/OR SUSP CEILING, VIF INTERIOR CONDITIONS – SEE DET C2/A-502 & C2/A-503
101		4-6	A-202	LG	HP	CHAIN	A2/A-501	A1/A-502 A5/A-502 @ CORNER B4/A-502	A2/A-501 A5/A-501	A4/A-504	(E) INTERIOR WALLS, BLINDS &/OR SUSP CEILING, VIF INTERIOR CONDITIONS – SEE DET C2/A-502 & C2/A-503
102		4-6	A-202	LG	HP	CHAIN	A2/A-501	A1/A-502 A5/A-502 @ CORNER B4/A-502	A2/A-501 A5/A-501	A4/A-504	(E) INTERIOR WALLS, BLINDS &/OR SUSP CEILING, VIF INTERIOR CONDITIONS – SEE DET C2/A-502 & C2/A-503
103		5-6	A-202	LG	HP	CHAIN	A2/A-501	A1/A-502 A5/A-502 @ CORNER B4/A-502	A2/A-501 A5/A-501	A4/A-504	(E) INTERIOR WALLS, BLINDS &/OR SUSP CEILING, VIF INTERIOR CONDITIONS – SEE DET C2/A-502 & C2/A-503
104		F5-3	A-202	LG	FIXED	FIXED	D5/ A-501	B4/A-502 D1/A-502	A5/A-501	A4/A-504	SUSPENDED CEILING, LIMITED ACCESS – VIF INTERIOR CONDITIONS
105		5-6	A-202	LG	HP	CHAIN	A2/A-501	A1/A-502 A5/A-502 @ CORNER B4/A-502	A2/A-501 A5/A-501	A4/A-504	(E) INTERIOR WALLS, BLINDS &/OR SUSP CEILING, VIF INTERIOR CONDITIONS – SEE DET C2/A-502 & C2/A-503
106		4-6	A-202	LG	HP	CHAIN	A2/A-501	A1/A-502 A5/A-502 @ CORNER B4/A-502	A2/A-501 A5/A-501	A4/A-504	(E) INTERIOR WALLS, BLINDS &/OR SUSP CEILING, VIF INTERIOR CONDITIONS – SEE DET C2/A-502 & C2/A-503
107		5-3	A-202	LG	HP	CHAIN	A2/A-501	A1/A-502 A5/A-502 @ CORNER B4/A-502	A5/A-501	A4/A-504	(E) INTERIOR WALLS, BLINDS &/OR SUSP CEILING, VIF INTERIOR CONDITIONS – SEE DET C2/A-502 & C2/A-503
108		5-6	A-202	LG	HP	CHAIN	A2/A-501	A1/A-502 A5/A-502 @ CORNER B4/A-502	A2/A-501 A5/A-501	A4/A-504	(E) INTERIOR WALLS, BLINDS &/OR SUSP CEILING, VIF INTERIOR CONDITIONS – SEE DET C2/A-502 & C2/A-503

A/E INFO

I CERTIFY THAT THIS DRAWING WAS PREPARED BY ME OR UNDER MY DIRECT SUPERVISION:

BARBARA S. SHIDELER LICENSED PROFESSIONAL No. 7760 HAWAII, U.S.A.

EXPIRES APRIL 30, 2016 SEAL

STM	DESCRIPTION	DATE	APPR

SUBMITTAL PHASE: FINAL

SUBMITTAL DATE: FEB 17, 2016

DES BSS | DRW MYW | CHK WL

STATE OF HAWAII
FACILITY MANAGEMENT OFFICE

DEPARTMENT OF DEFENSE
DESIGN AND PROJECT MANAGEMENT BRANCH

HAWAII ARMY NATIONAL GUARD

BUILDING 117

KALAELOA (FORMER BARBERS POINT NAS), HAWAII

BLDG 117 WINDOW SYSTEM REPLACEMENT - BRAVO 117

WINDOW SCHEDULE

SCALE: AS NOTED

STATE JOB NO. CA-1425-C

FEDERAL PROJECT NO. 15140059

SHEET 34 OF 35

A-602

WINDOW GROUP DETAIL SCHEDULE

GROUP TYPE	HEAD	JAMB	SILL	FLASHING
A	C4/A–501	A1/A–502	A1/A–501 SIM	A5/A–504
B	C4/A–501	A1/A–502 B4/A–502, C2/A–502 & C2/A–503 @ INT WALLS	A1/A–501 SIM	A5/A–504
C	A2/A–501 D5/A–501	A1/A–502 A3/A–502 A5/A–502 @ CORNERS	A2/A–501 A5/A–501	A4/A–501
D	C4/A–501	A1/A–502	A1/A–501	A4/A–504
E	B1/A–501	A1/A–502 A3/A–502 B4/A–502, C2/A–502 & C2/A–503 @ INT WALLS B1/A–502 & C1/A–502 WHERE OCCURS	A1/A–501	A4/A–504
G	A2/A–501 D5/A–501 B1/A–501	A1/A–502 A3/A–502 B4/A–502, C2/A–502 & C2/A–503 @ INT WALLS	A1/A–501 @ (G–5) A2/A–501 A5/A–501	A4/A–504

DIAGRAMMATIC OPERABLE WINDOW SYSTEMS

RACK & PINION
MANUAL CRANK

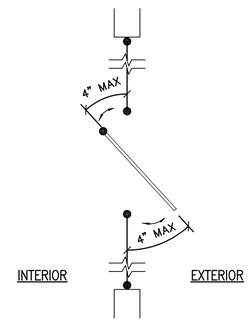

CHAIN OPERATOR

WITH SPRING LATCH

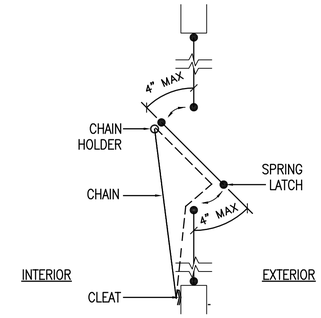

GENERAL NOTES

1. A) WINDOW TYPES: HORIZONTAL PIVOT (HP)
   FIXED
   B) DOOR TYPES: SWINGING
2. WINDOW OPERATORS: CHAIN WITH SPRING LATCH
   RACK AND PINION – MANUAL CRANK
3. GLAZING TYPES: LAMINATED SAFETY GLASS (LG)
   ALL WINDOWS AND DOORS ARE INTERIOR GLAZED UNLESS OTHERWISE NOTED.
4. SEALANT COLOR: SHERWOOD TAN
5. FRAME CONSTRUCTION & FINISH: STEEL WINDOWS, HOT DIP GALVANIZED, PAINTED PER SPEC SECTION 08510.
6. FRAME COLOR: AS SPECIFIED FOR EXTERIOR AND INTERIOR FACE OF FRAME, T AND I–MULLIONS, STEEL PLATES, FLASHING, AND WINDOW OPERATOR & INFRASTRUCTURE
7. ALL WINDOWS ARE INSTALLED FROM THE EXTERIOR UNO, REFER TO DETAIL SHEETS A–500s.
8. LOCATE SUPPORT BRACKETS FOR OPERATORS MAXIMUM 8'–0" ON CENTER IN SINGLE RUN. ATTACH TO STEEL MULLIONS.
9. WINDOW SIZES ARE APPROXIMATE, CONTRACTOR TO VERIFY DIMENSIONS IN THE FIELD.
10. PAINT INTERIOR WINDOW SURROUNDS, TO THE NEAREST VERTICAL EDGE. REFER TO PAINT SCHEDULE.

PAINT COLOR SCHEDULE

PAINT COLOR NUMBER	COLOR	AREAS
PT1	MATCH EXISTING & FINISH	INTERIOR AND EXTERIOR STEEL FRAMING SURROUNDING THE WINDOW INCLUDING CORRUGATED PANELS AND MULLIONS, TO THE NEAREST EDGE
PT2	MATCH EXISTING & FINISH	INTERIOR WALL AND CEILING SURFACES WHERE PATCHING OCCURS
PT3	MATCH EXISTING & FINISH	INTERIOR WOOD SURFACES

TYPICAL WINDOW DETAIL SECTIONS

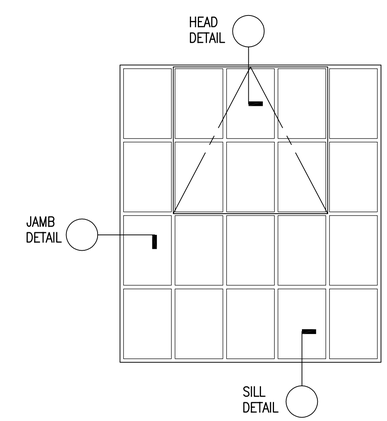

A/E INFO

I CERTIFY THAT THIS DRAWING WAS PREPARED BY ME OR UNDER MY DIRECT SUPERVISION.

BARBARA S. SHIDELER
LICENSED PROFESSIONAL
No. 7760
HAWAII, U.S.A.

EXPIRES APRIL 30, 2016 SEAL

STM	DESCRIPTION	DATE	APPR

SUBMITTAL PHASE: FINAL

SUBMITTAL DATE: FEB 17, 2016

DES BSS DRW MYW CHK WL

STATE OF HAWAII
FACILITY MANAGEMENT OFFICE

HAWAII ARMY NATIONAL GUARD
DESIGN AND PROJECT MANAGEMENT BRANCH
DEPARTMENT OF DEFENSE

BUILDING 117
KALAELOA (FORMER BARBERS POINT NAS), HAWAII

BLDG 117 WINDOW SYSTEM REPLACEMENT - BRAVO 117

WINDOW GROUP DETAIL SCHEDULE, DIAGRAMMATIC OPERABLE WDW SYSTEMS, TYPICAL WINDOW DETAIL SECTIONS, GENERAL NOTES & PAINT SCHEDULE

SCALE: AS NOTED

STATE JOB NO. CA–1425–C

FEDERAL PROJECT NO. 15140059

SHEET 35 OF 35

A-603