UNIVERSITY OF HAWAI`I AT MĀNOA

HAIGO & IRENE SHEN ARCHITECTURE GALLERY

TEMPORARY HOUSING UNIT WIKI HALE

Lead Architect: Bundit Kanisthakhon *Planning Coordinator:* Amber Ternus

TABLE OF CONTENTS

Graphics: My Tran

INTRODUCTION

Hawaii is the most isolated population center on earth making it unique in its vulnerability to natural disasters such as hurricanes or tsunamis. The need for place-based, locally sourced solutions to meet the need for temporary housing in the result of such a disaster is the primary goal of this project.

This design was created using a community design approach in partnership between the Hawaii Emergency Management Agency (HI-EMA) and the University of Hawai`i at Mānoa - School of Architecture. Students in ARCH 201 prepared a variety of design options for post-disaster housing with HI-EMA offering specific design feedback, background information on emergency management priorities and ongoing support throughout the course.

The design has that married aesthetic, functionality and cost to create a beautiful, comfortable and functional space. Phase 2 will continue to grow the design applications of the Wiki Hale to include a wide variety of potential uses such as joining units for large family groups and kupuna, or modifying design options to meet the needs of the houseless population. It is the project team's goal to expand the overall number of units built, and to begin "populating" and testing them to improve overall functionality, ease of setup, and production plan. Purchasing and installing these units and the additional features needed for them will cost approximately $2,500 per unit.

This booklet is a complete documentation of a singular housing unit within Wiki Hale village. It includes a list of materials and guidance explaining how the unit is constructed within a short amount of time.

Photographer: Aaron Yoshiro

SET OF TOOLS

Ease of set-up and take-down. Units can be taken apart and re-used multiple times without damage to the materials, using only a wrench. The system is designed to be installed by people with no construction or building experience.

#2 | ratchet

SET OF MATERIALS | BUILDING MATERIAL

At just $2,000 per single structure these are potentially the most affordable emergency housing units available in the country. This design will be open-source, as the team's ultimate goal is to make this plan available for communities around the Pacific who traditionally have not had access to quality temporary affordable housing.

Unistrut Base Post
- 4″ x 4″

Unistrut Post
- 10 feet tall

UNISTRUTS | footing and posts

Plywood Board:
- 48″ x 96″ x 1/2″
- 48″ x 96″ x 3/4″

Polycarbonate Panel:
- 48″ x 96″ x 1/2″

Corrugated Metal Sheet:
- 26″ x 72″

PANELS | flooring, wall panels, and roofing

*** see cut sheet for more details*

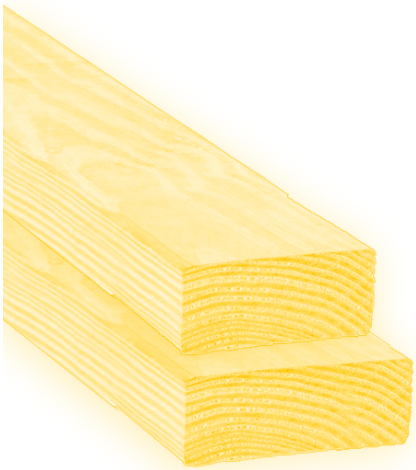

Yellow Set:
- 2″ x 4″ x 8′
- 2″ x 4″ x 10′
- 2″ x 6″ x 10′

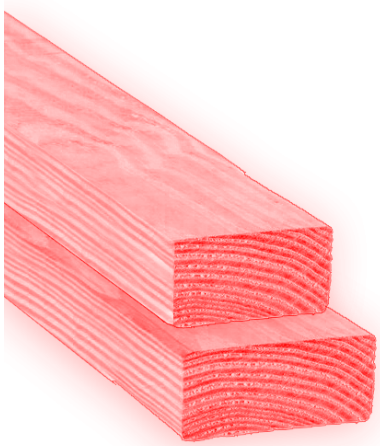

Red Set:
- 2″ x 3″ x 8′
- 2″ x 3″ x 10′
- 2″ x 4″ x 8′

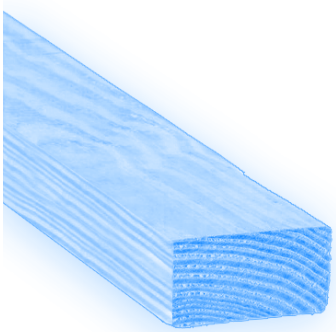

Blue Set:
- 2″ x 3″ x 10′
- 2″ x 3″ x 12′

LUMBERS | floor, wall, and roof frames

Bolts, Nuts and Washers:
- 3 1/2″
- 4 1/2″
- 6 1/4″

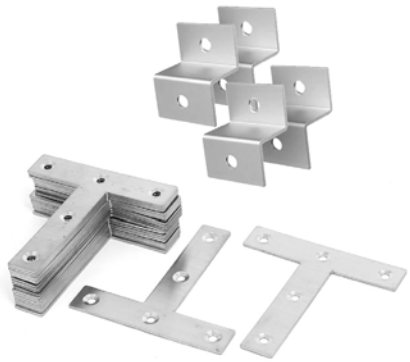

Brackets:
- Metal T
- Z Brackets

Additional Elements:
- EZ Shims
- Spring nuts
- Closure strip wood
- Nails

HARDWARES | connection

SET OF MATERIALS | LIVING MATERIAL

These materials provide the essential needs for human basics such as cooking, sleeping, showering, and relaxing after a disaster event.

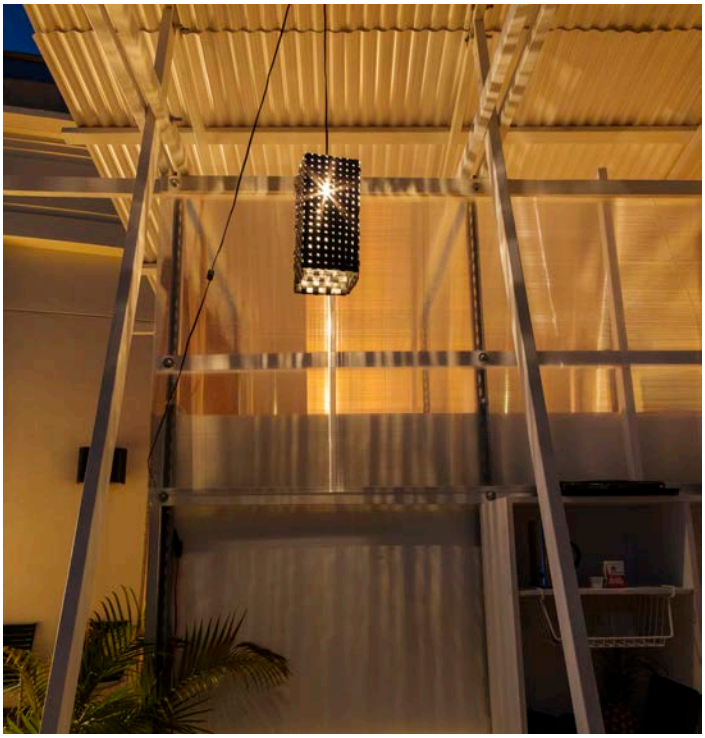

LIGHTS | outdoor lights

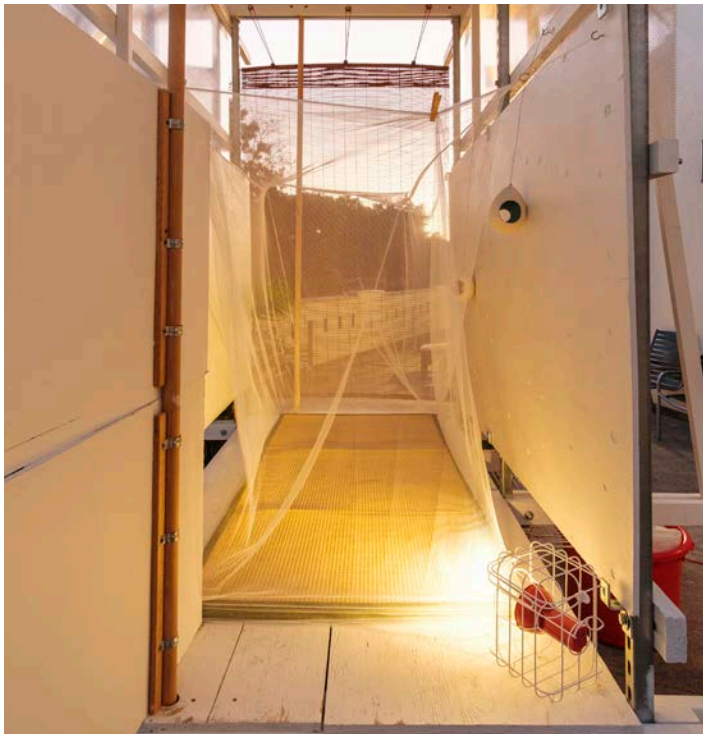

SLEEP | mosquito nets and mattress

KITCHENETTE | shelves, sink, plates

SAFETY | sensor lights

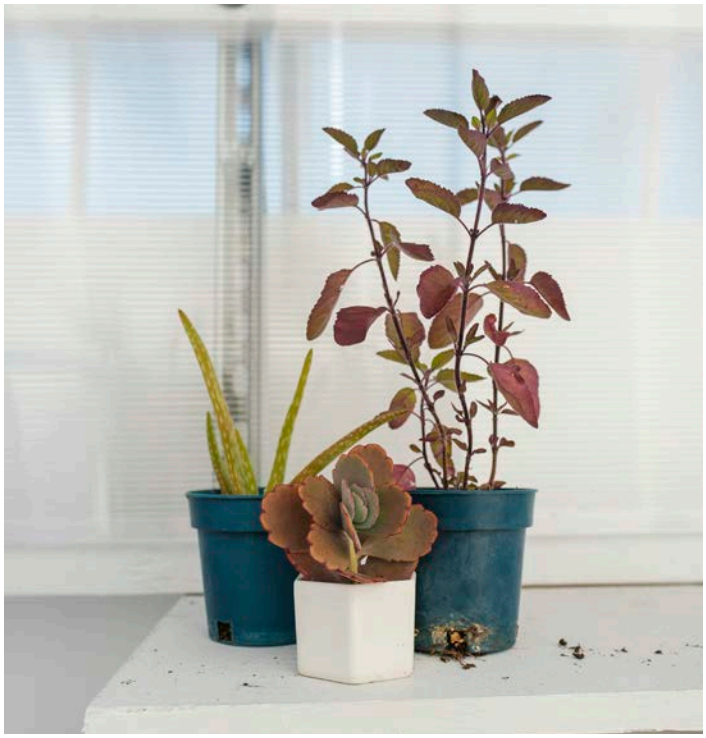

SENSES | planters, herbs, flowers

KITCHENETTE | food storages

MULTI-TASK TOOLS | buckets, ...

PACKET SET

Packaging, or boxing, of units still needs to be fully designed in order to include a packing system that results in a "Hale in a box" storage system. Ultimately the goal is to have the entire system included in one box, with the box itself using materials for the Wiki Hale.

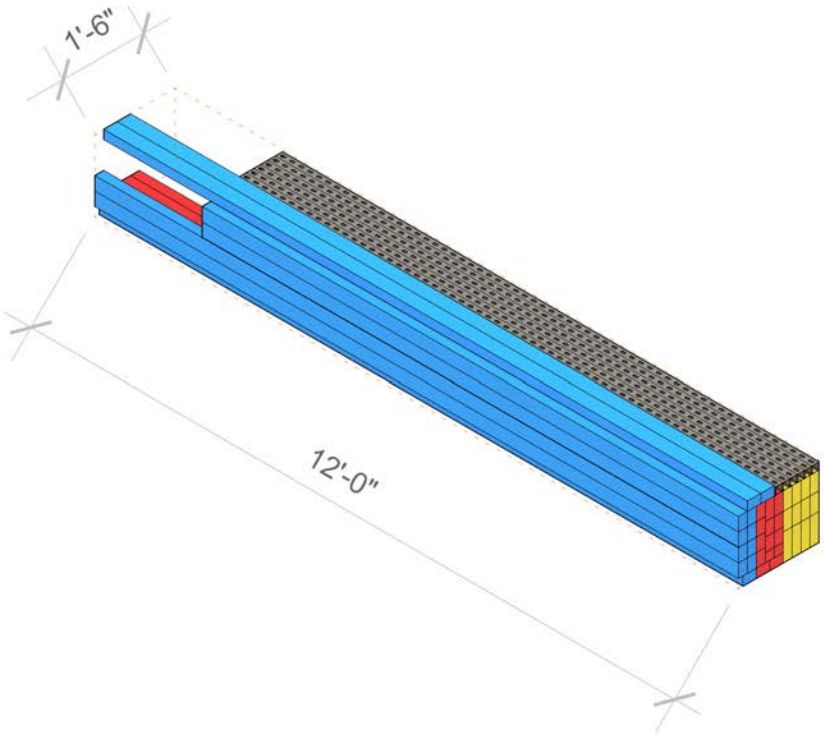

VERTICAL STRUCTURAL ELEMENTS | unistruts and lumber studs

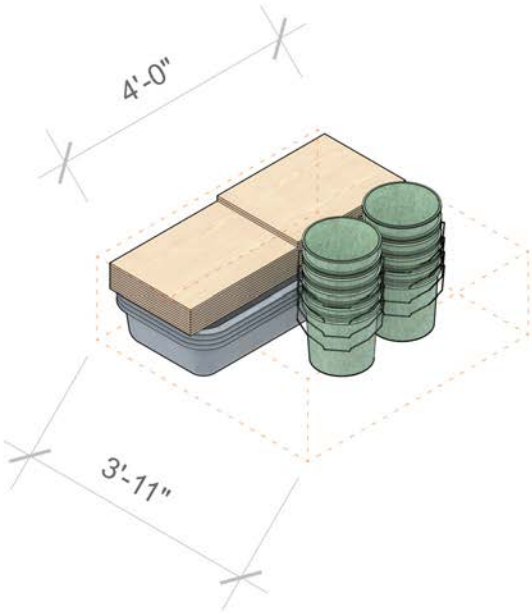

BASIC NEEDS |food, medication, shelves, toiletries, and buckets

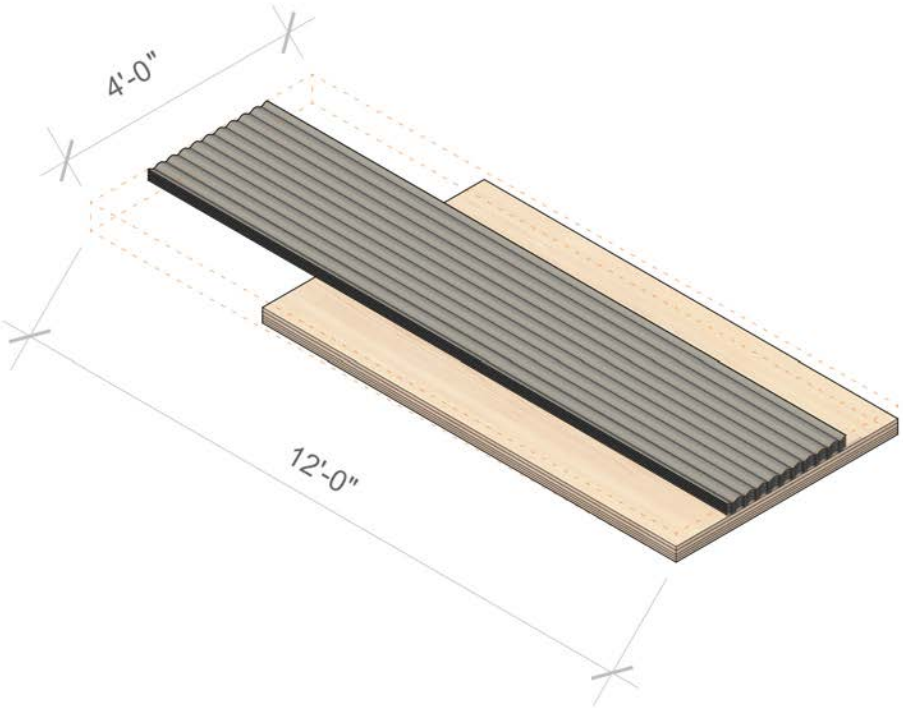

PANELS | plywood boards, metal sheets, and fabrics

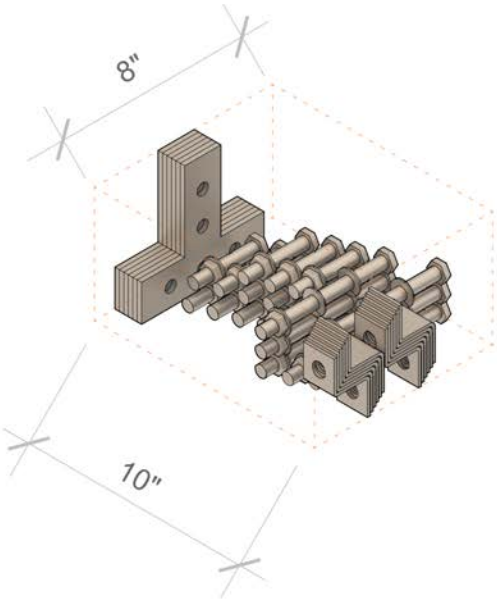

HARDWARE | all hardwares and tools

TECHNICAL DRAWINGS

Each shelter is constructed with standard single unit size specifications at 8 feet long, 8 feet tall (using 10-foot metal posts) and 4 feet wide.

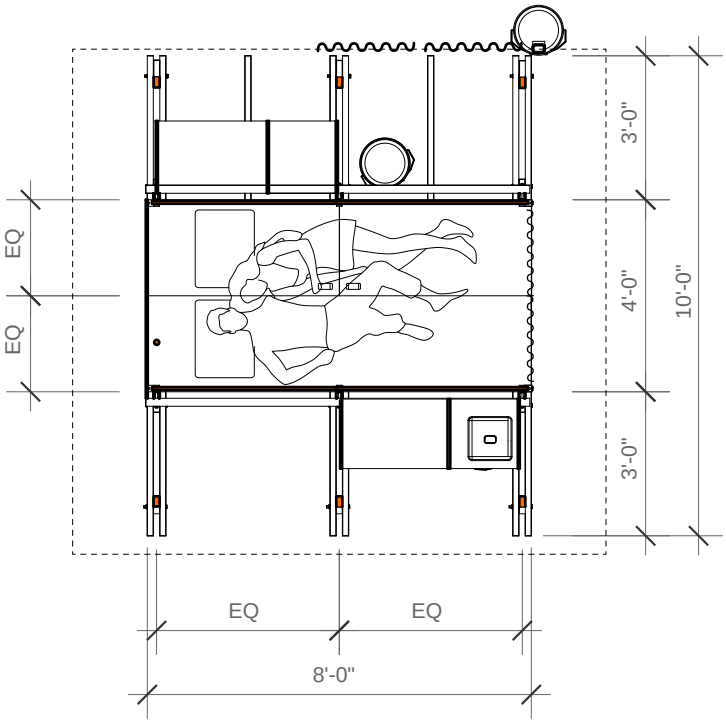

FLOOR PLAN | 1'-0" = 1/4"

FRONT ELEVATION | 1'-0" = 1/4"

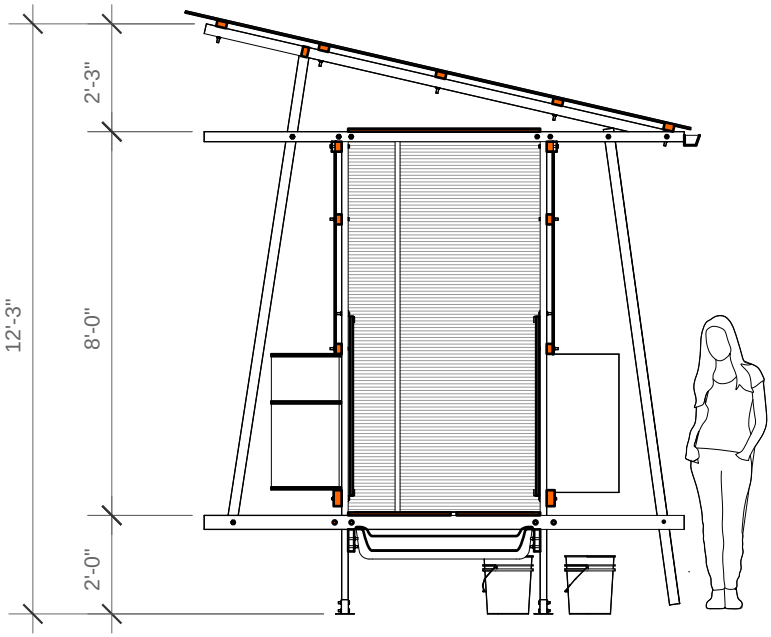

SECTION | 1′-0″ = 1/4″

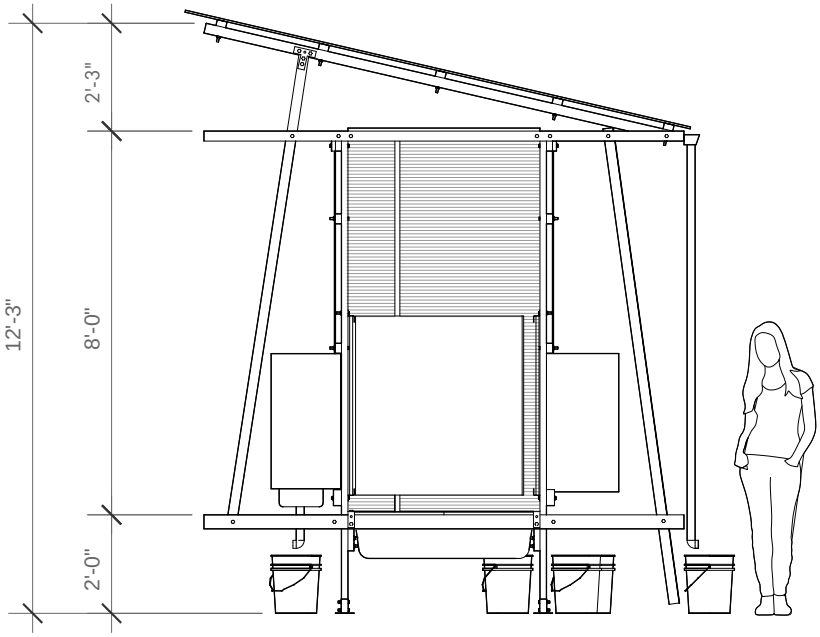

SIDE ELEVATION | 1′-0″ = 1/4″

BUILDING ASSEMBLY | PRIMARY STRUCTURAL GROUP

After getting into a designated area with the stable ground (suggested to have temporary concrete blocks as foundation), we begin with 6 unistruts post bases placed on the top of the foundation.

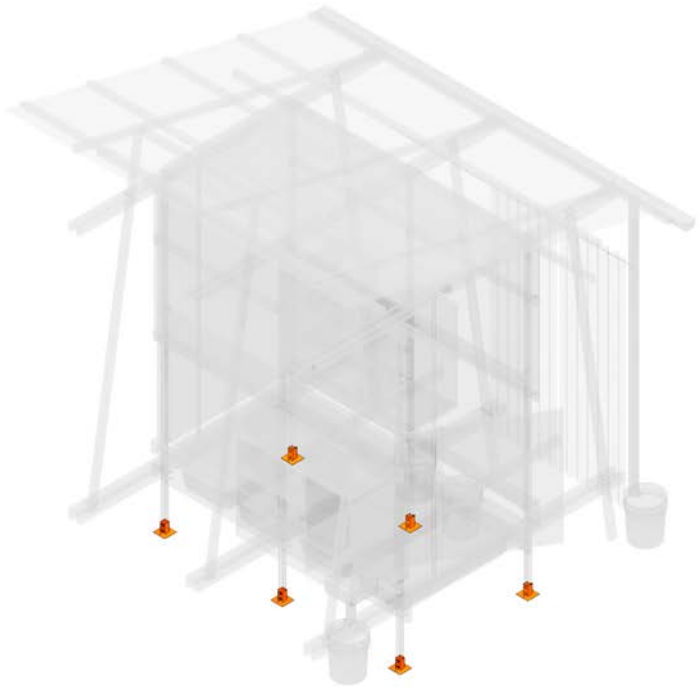

1 FOUNDATION | unistrut bases

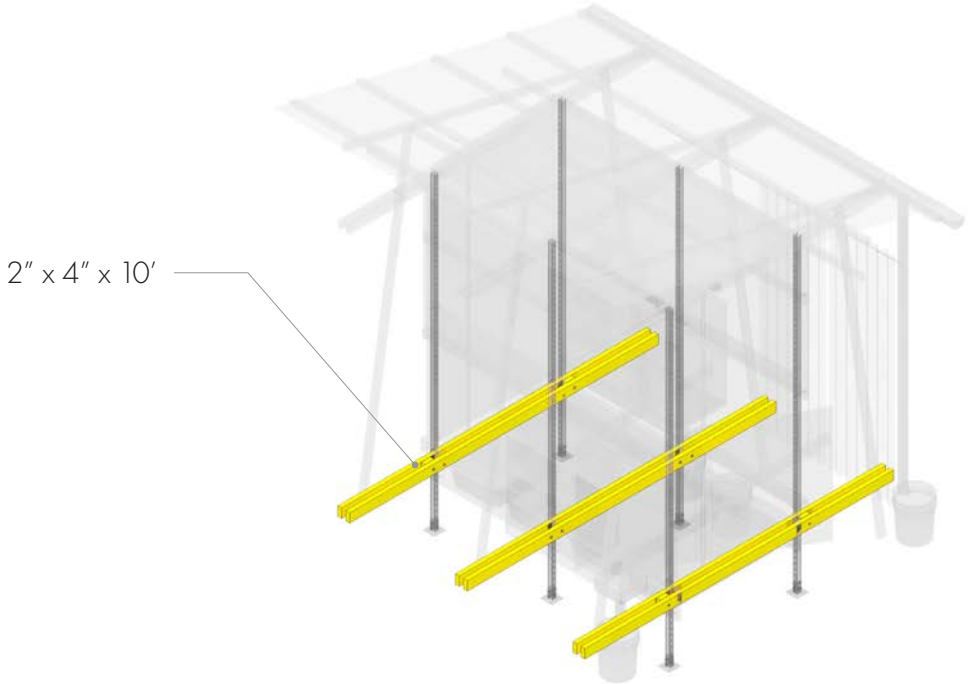

3 PRIMARY HORIZONTAL FRAMES | lumber

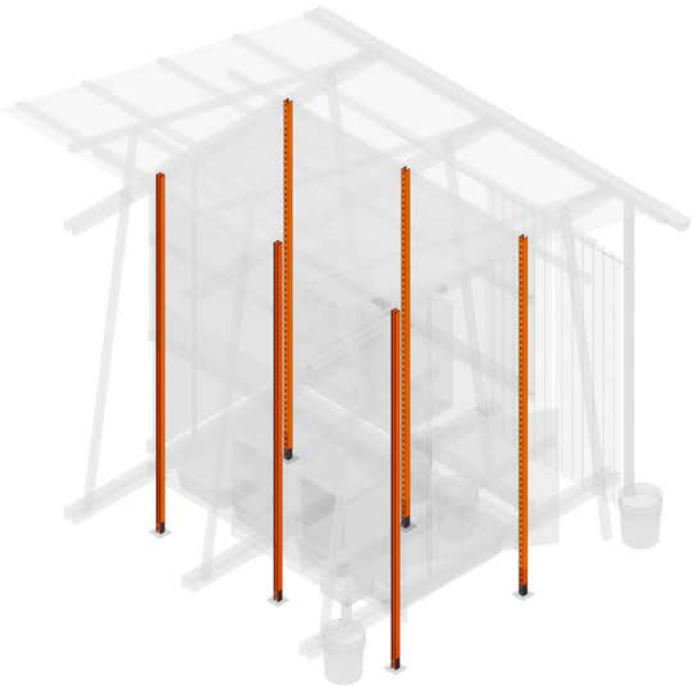

2 PRIMARY VERTICAL FRAMES | unistrut studs

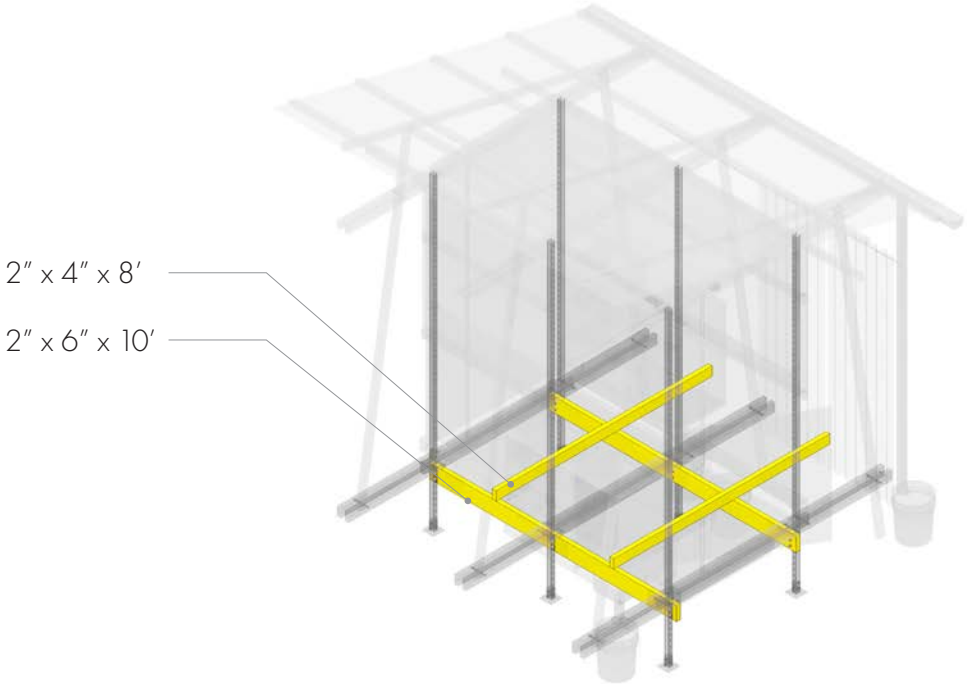

4 FLOOR FRAMING | lumber

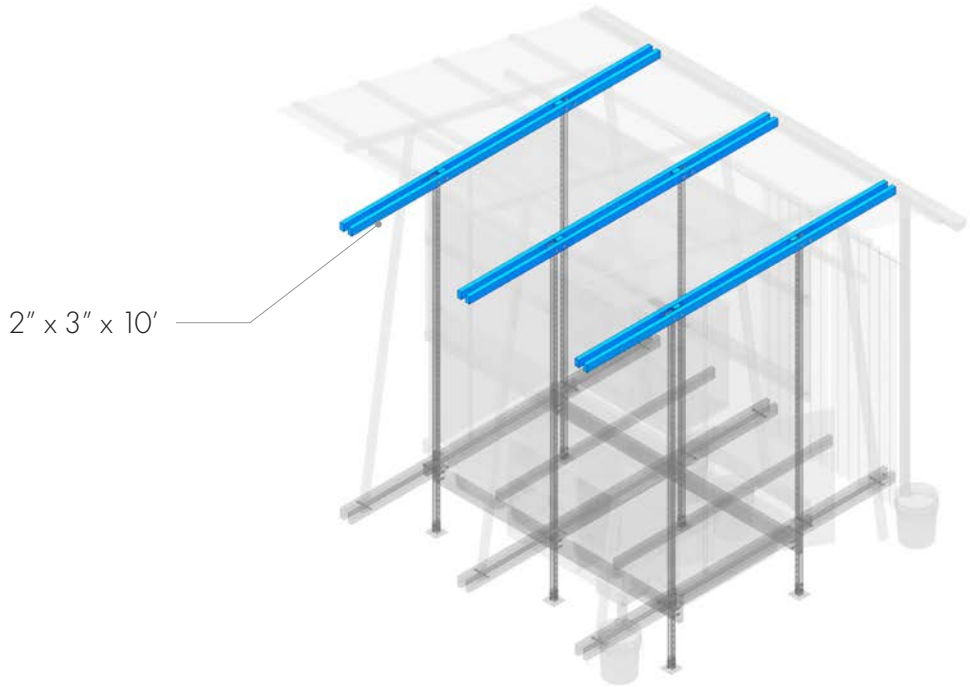

5 PRIMARY HORIZONTAL FRAMES | lumber

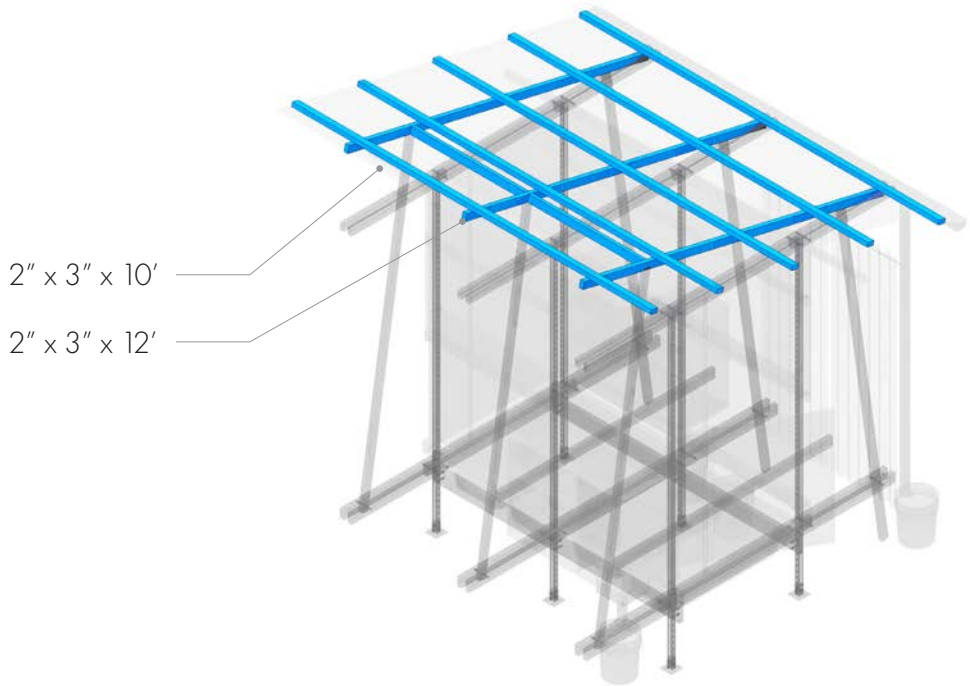

7 ROOF FRAMING | lumber

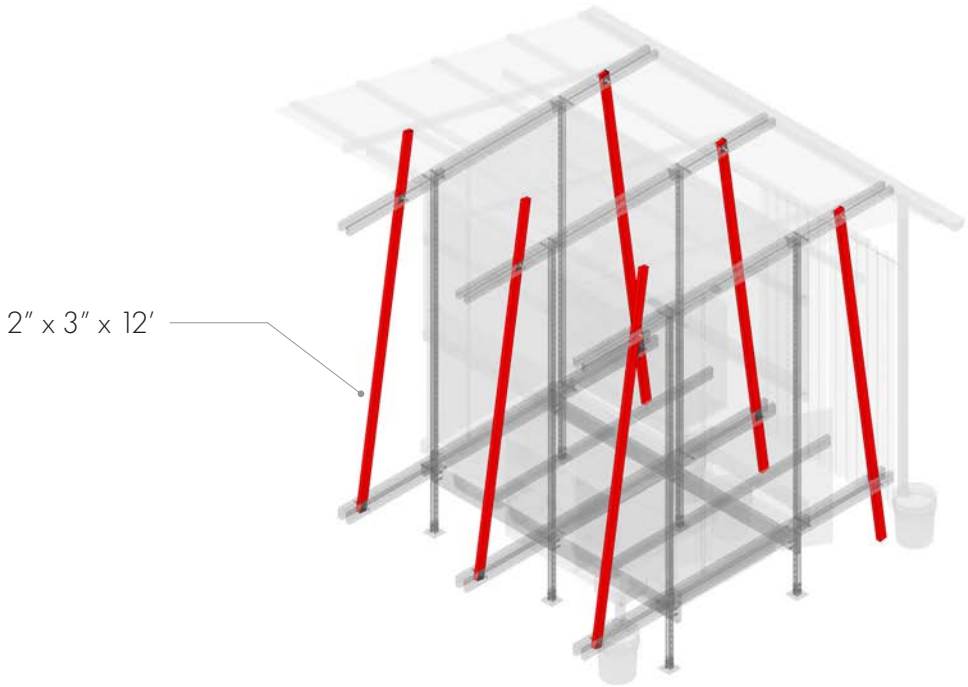

6 PRIMARY VERTICAL FRAMES | lumber

8 ROOFING | corrugated metal sheets

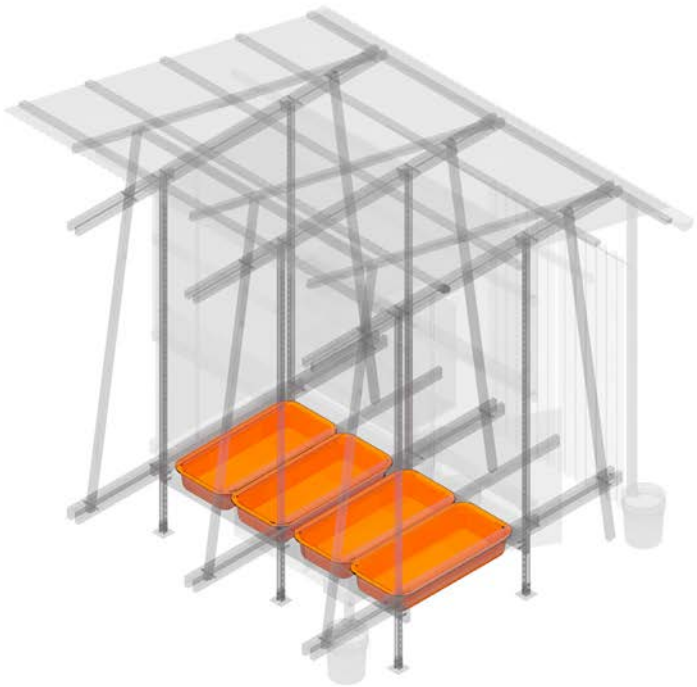

9 STORAGES | big-sized buckets

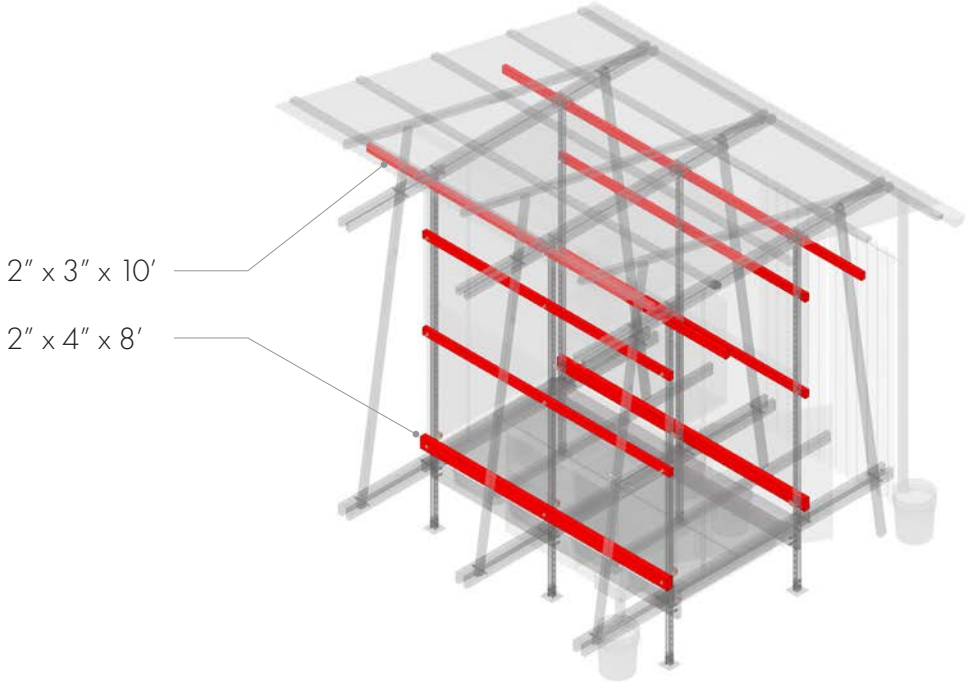

11 SECONDARY HORIZONTAL FRAMES | lumber

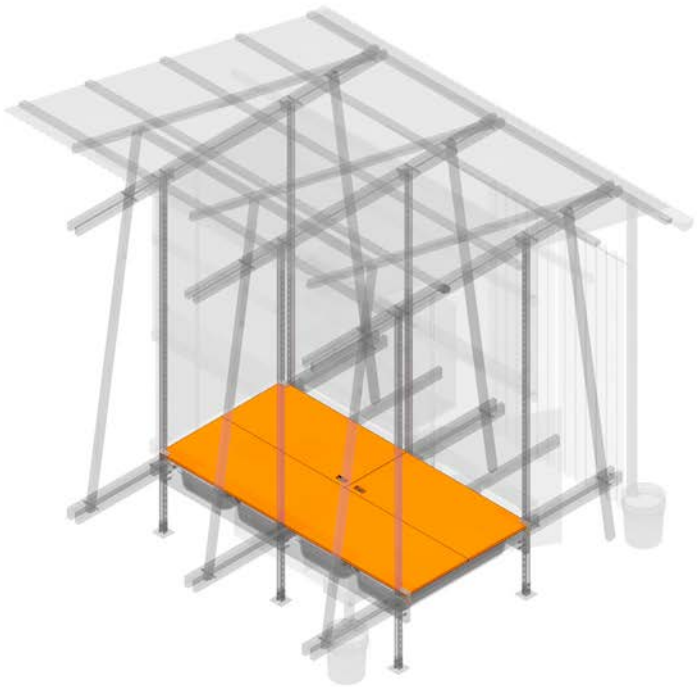

10 FLOORING | plywood

12 WALL PANELS & DOOR | plywood boards

BUILDING ASSEMBLY | ACCESSORIES

Once the main structure is built, these following items are default, but they can be customized or replaced according to the needs of each family.

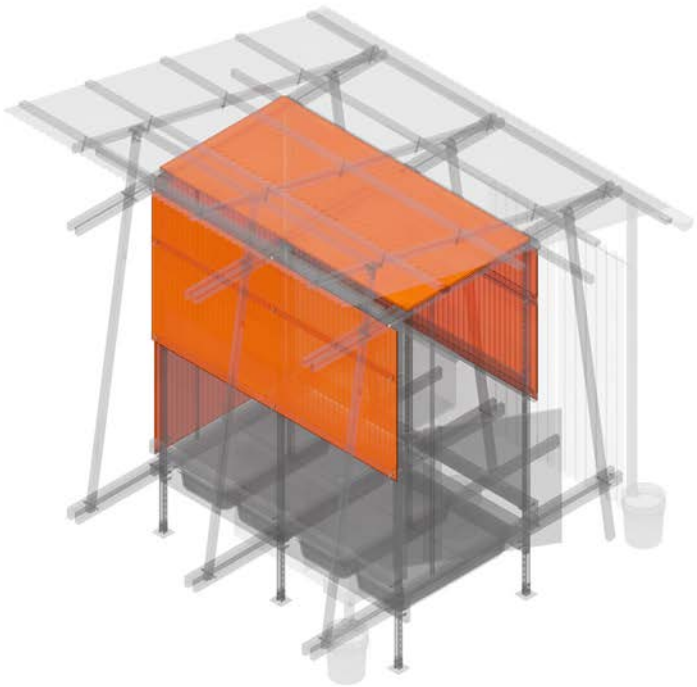

13 TRANSPARENT PANELS | polycarbonate boards and bamboo screen

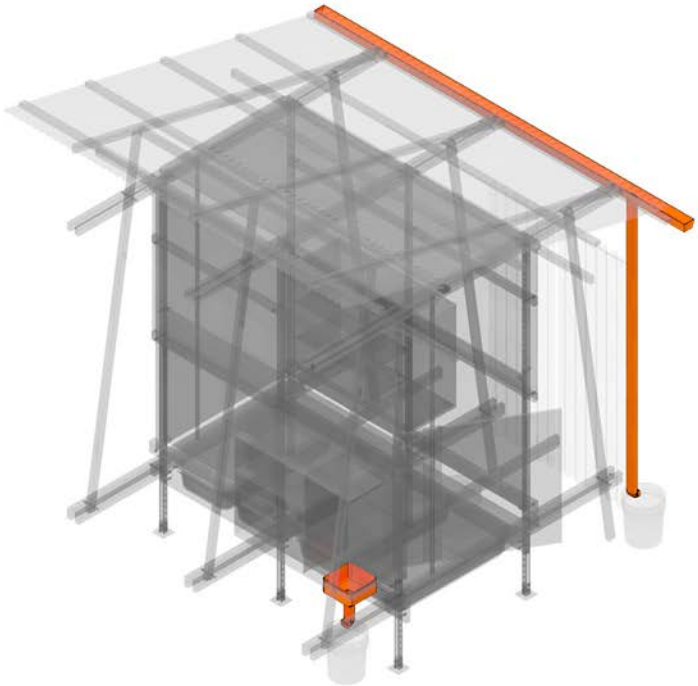

15 WATER CATCHMENT & KITCHEN BASE | gutter and sink

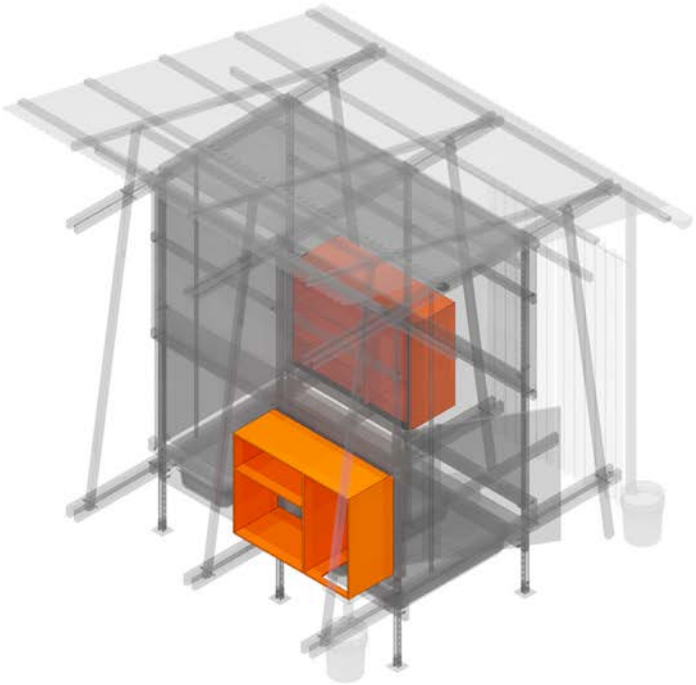

14 KITCHENETTE | shelves and cabinets

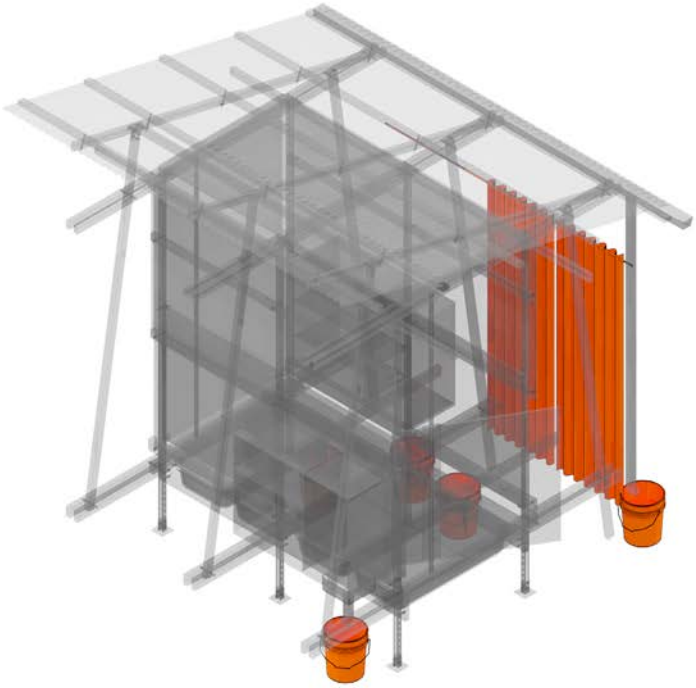

16 WATER STORAGE, WASTE, & SHOWER | buckets and curtains

DETAILS | FOOTING TO ROOF

Place-based collaborative design process. These units are uniquely designed for a tropical climate with factors such as security, heat, air flow, moisture, rain catchment, and elevation of the main platform featured.

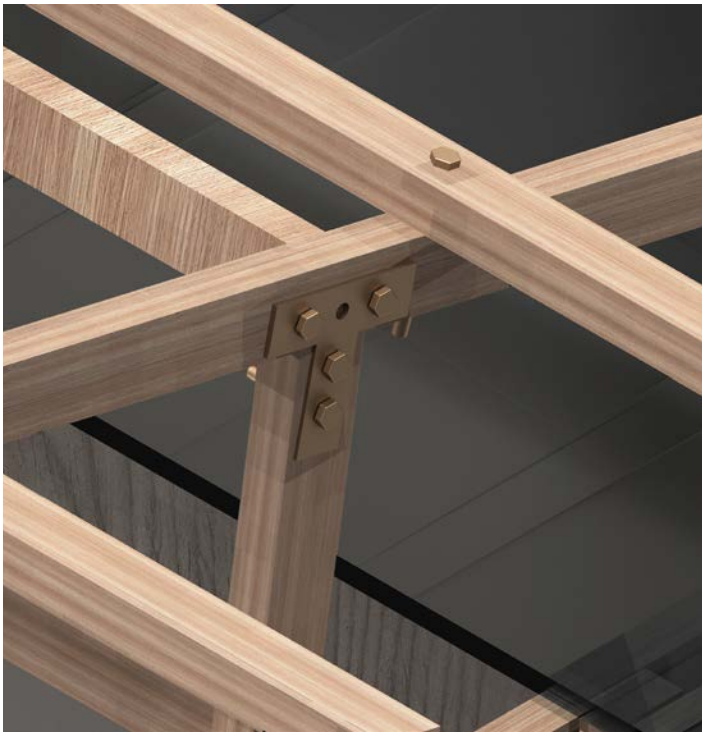

1 ROOF FRAMING DETAIL

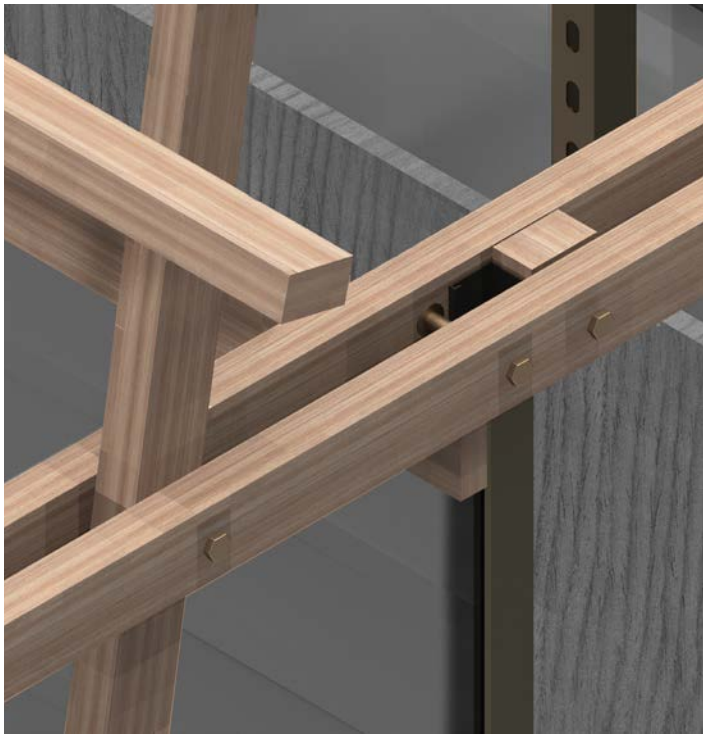

2 BEAM DETAIL

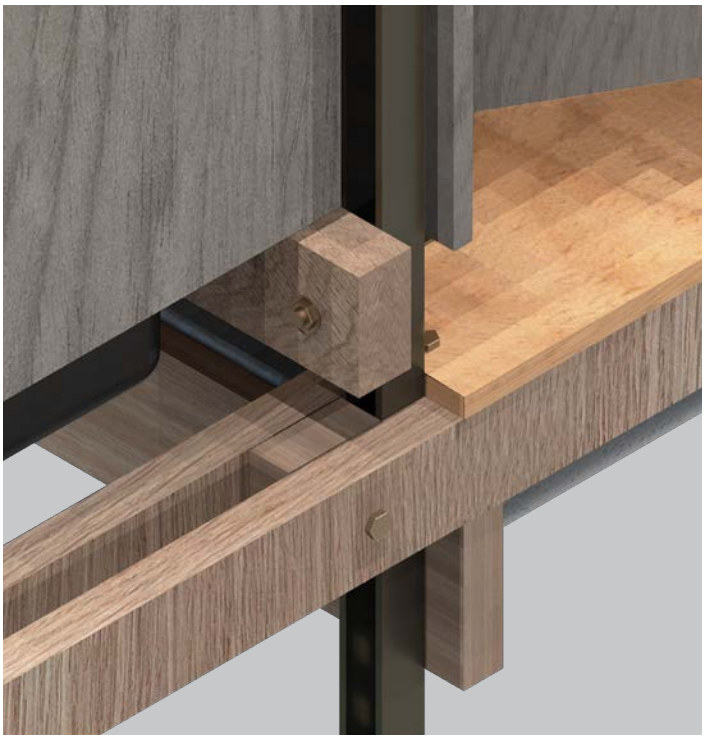

3 FLOOR FRAMING DETAIL

4 FOOTING DETAIL

ISOMETRIC VIEW

WIKI HALE MODULE

Modular design. As family units come in many different sizes the Wiki Hale has been designed to accommodate one person, with additional units attached together to increase the total footprint of each Hale.

NW ISOMETRIC VIEW

NE ISOMETRIC VIEW

WIKI HALE COMMUNITY

Each unit can either stand itself or quickly connect to another unit to increase the size to accommodate the need of different family sizes.

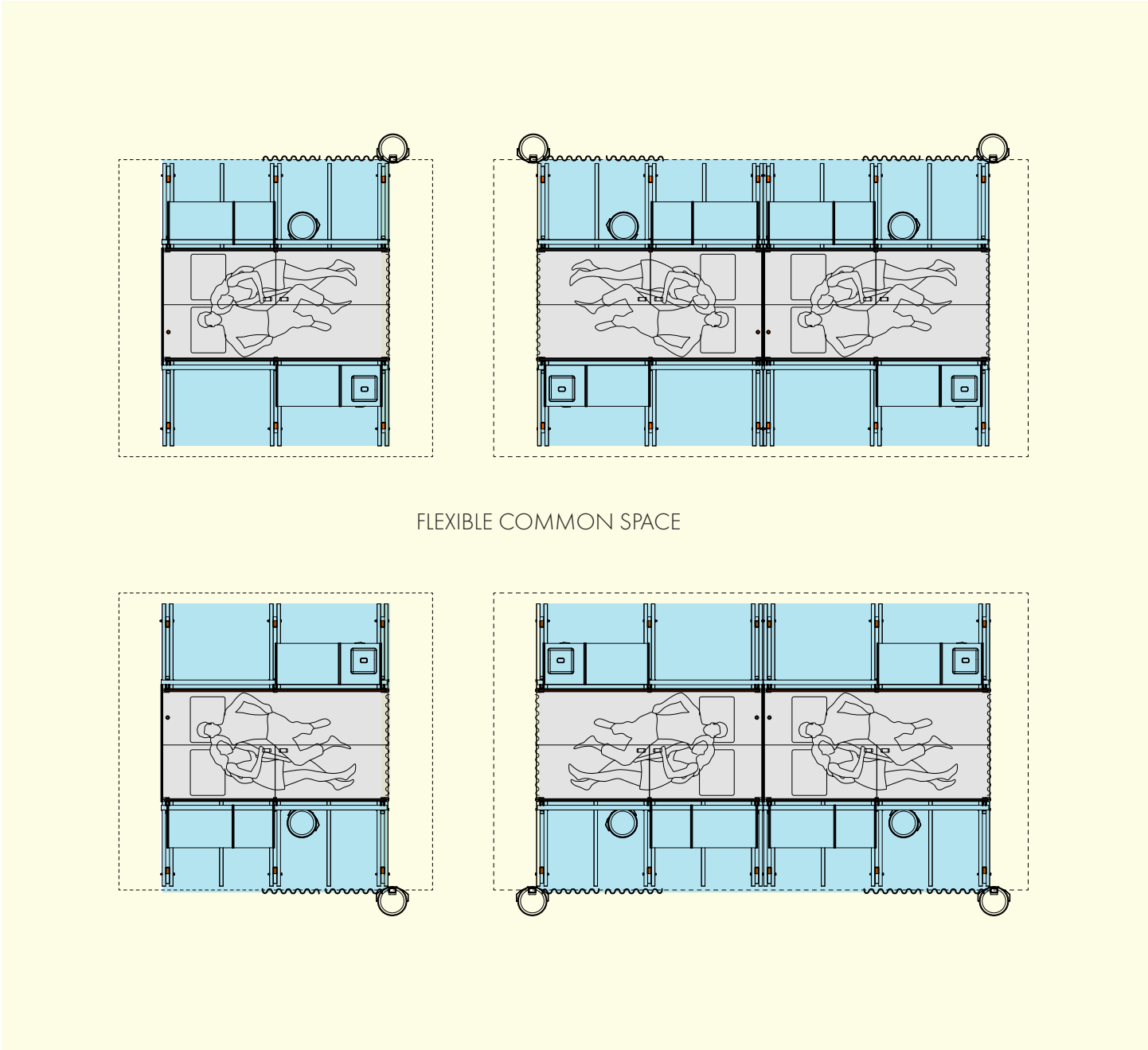

PRIVATE SPACE UTILITY SPACE COMMON SPACE

CONNECTION DIAGRAM

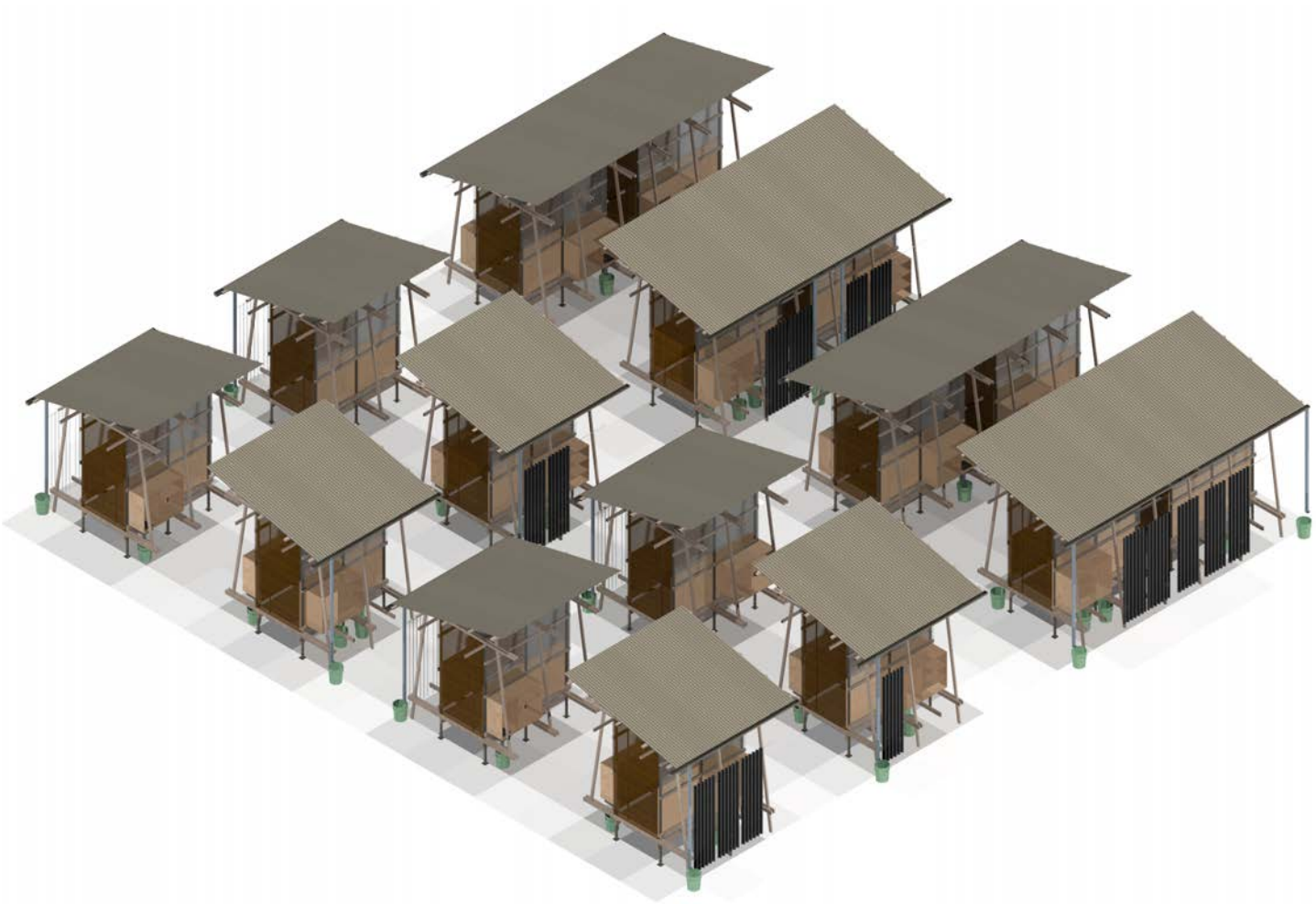

NE ISOMETRIC VIEW

PHOTO-MONTAGES

Vulnerabilities to catastrophic natural disasters affect all residents of Hawaii, but lower income homes are most likely to use emergency shelters and temporary housing solutions. In Hawaii, over 33,800 Native Hawaiians and Pacific Islanders (24%) live in poverty. These lower income residents often live in more affordable housing that has a higher likelihood of vulnerability to damage and loss of use following a disaster event.

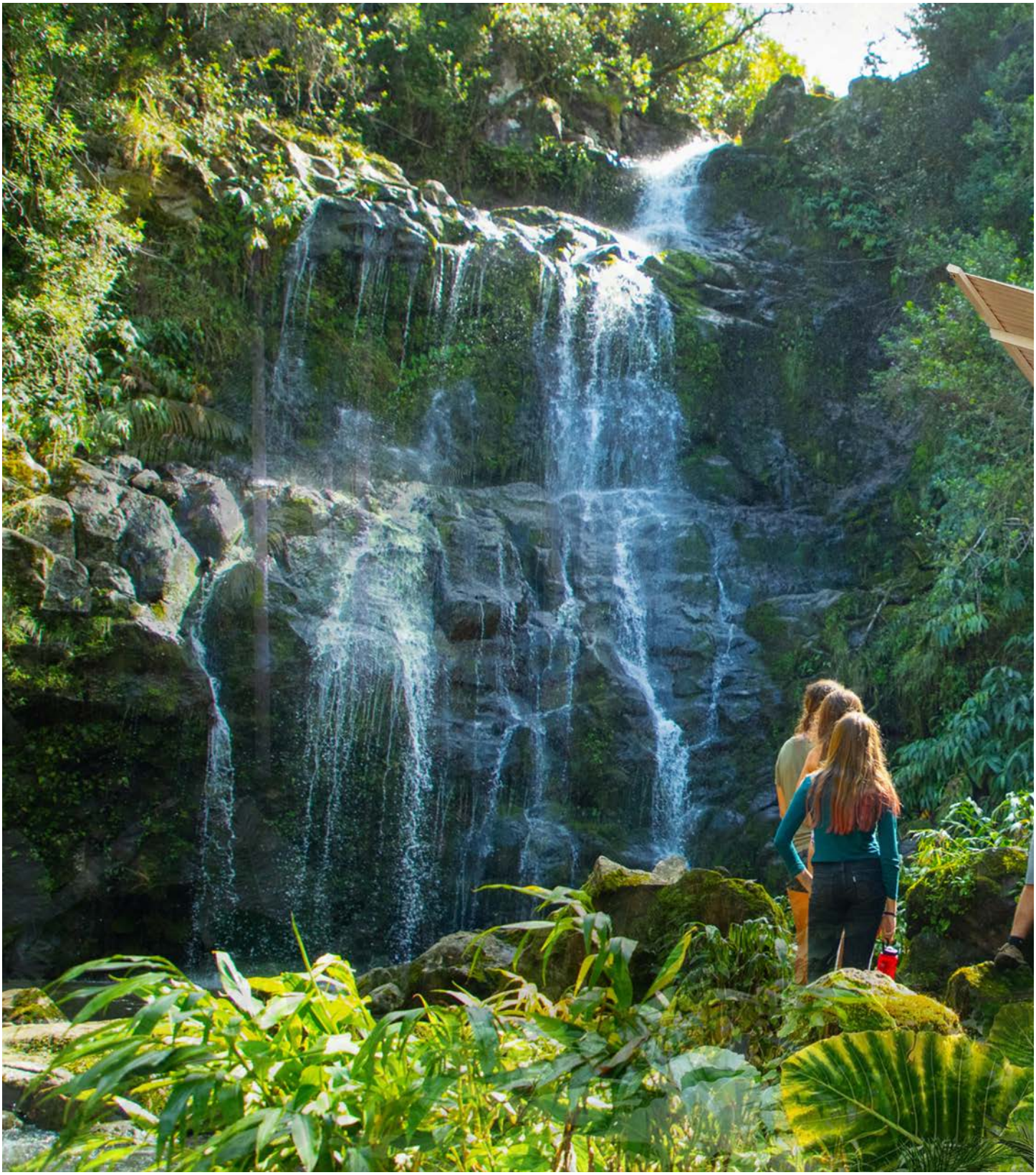

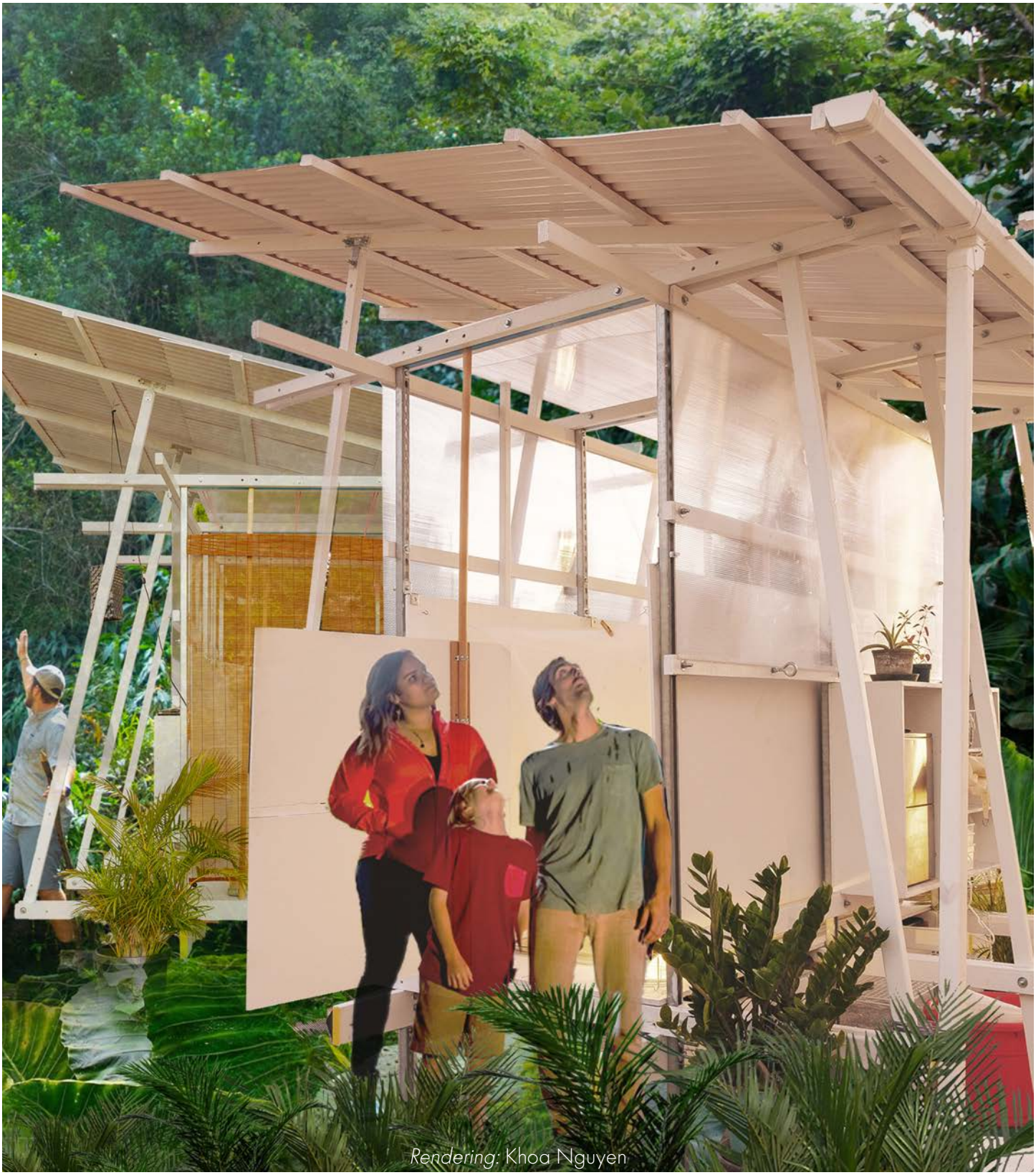

Rendering: Khoa Nguyen

PHOTO-MONTAGES

This project is aimed at bringing together affordable design solutions with the communities that will most likely need the additional support of emergency housing post-disaster.

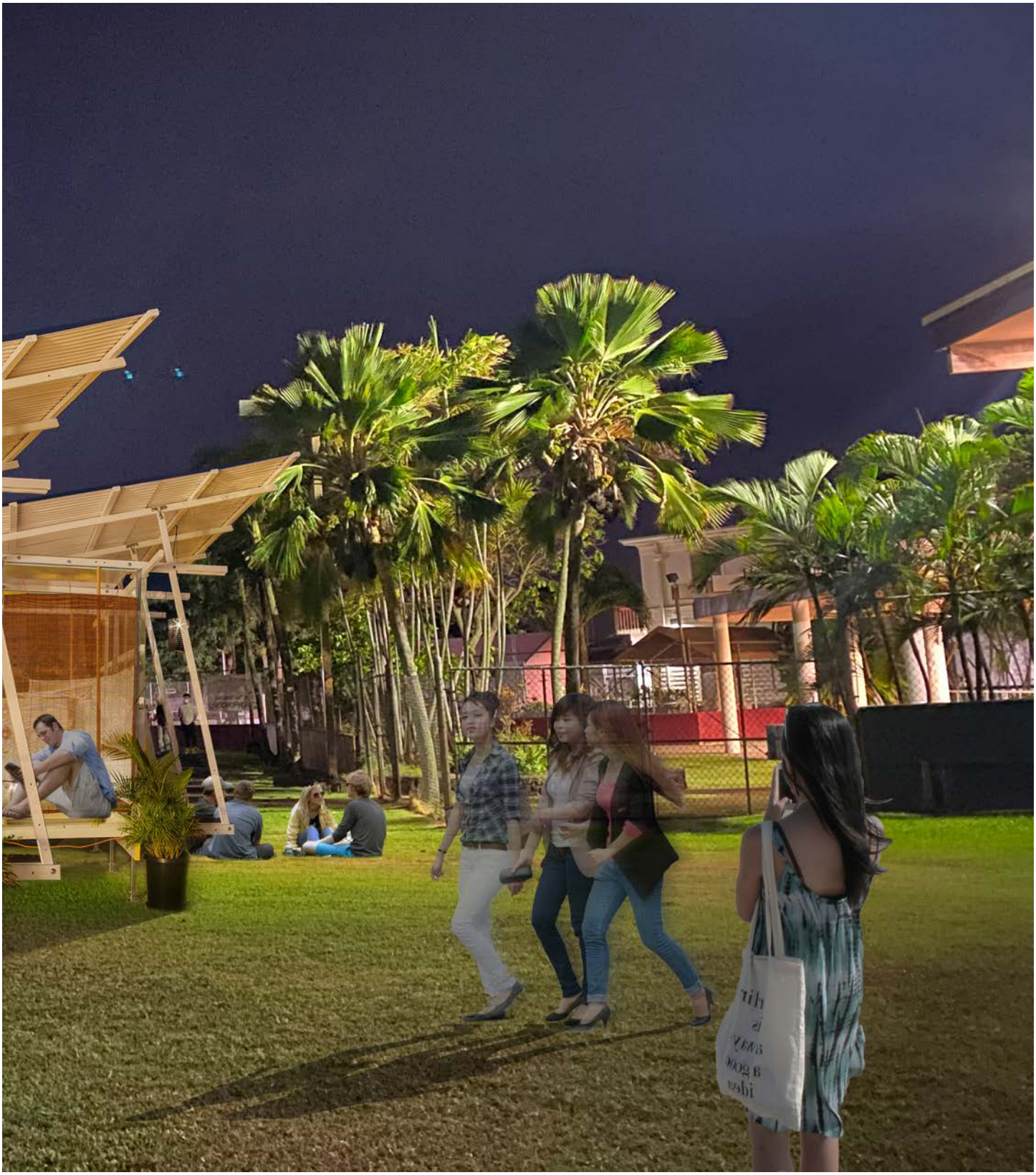

PROJECT TEAM

HAWAII EMERGENCY MANAGEMENT AGENCY (HI-EMA)

Amber Ternus
David Lopez
Liz Fischer
Luke Meyers
Theresa Woznick

FEDERAL EMERGENCY MANAGEMENT AGENCY (FEMA)

Jennifer Lieb

UHM | SCHOOL OF ARCHITECTURE

Tony Cao
William Chapman
Martin Despang
Steve Hill
Bundit Kanisthakhon
Pamala Kato
Charlene Lagondino
Clark Llewellyn
Ian Robertson
David Rockwood
Eva Sekimoto
Lance Walter
Lance (Housekeeping man)

ARCH 201 | FALL 2021

Toby Baladad
Jasmyn Ann Carlos
Demetrio Castillo
Bethney de la Torre
Gemma Halim
Noreen Ibana
Frank Jiang
Karolyn Jones
Brandon Keene
Rianna-Destri Lee
Angelie Mae Mariano
D'Elle Ohashi Martin
Katelen Morgan Orquia
Ty Taguchi
Perscilla Tavor
William Von Seggern

UH SOA ALUMNI & STUDENTS VOLUNTEER

Branden Annino | Keola
Herman Lau
Khoa Nguyen
Vivian Nguyen
Vinh Phan
Christopher Songvilay
My Tran
Zoey Xu | Kun

Mahalo!

School of Architecture
University of Hawai'i at Mānoa
2410 Campus Road
Honolulu, HI 96822