HAWAII ARMY NATIONAL GUARD
PHYSICAL SECURITY AND IMPROVEMENTS

WAIAWA PERIMETER FENCE

WAIAWA (PEARL CITY), HAWAII

VICINITY MAP

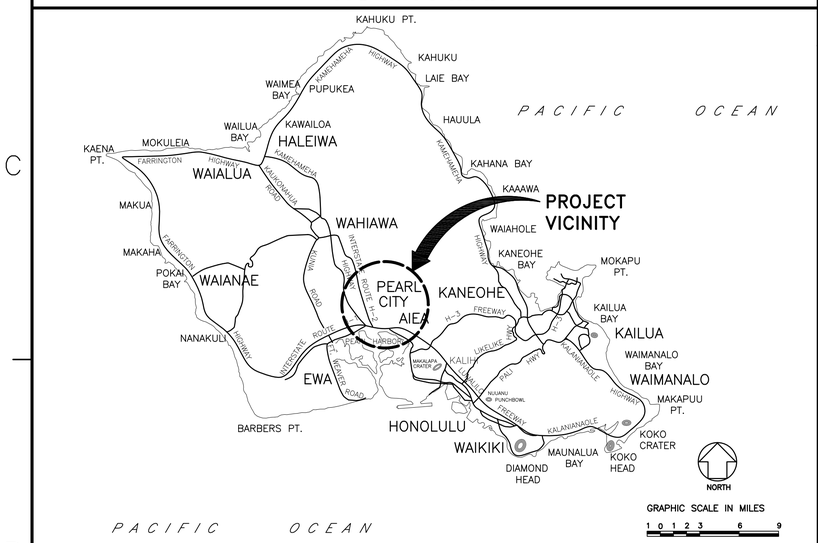

LOCATION MAP

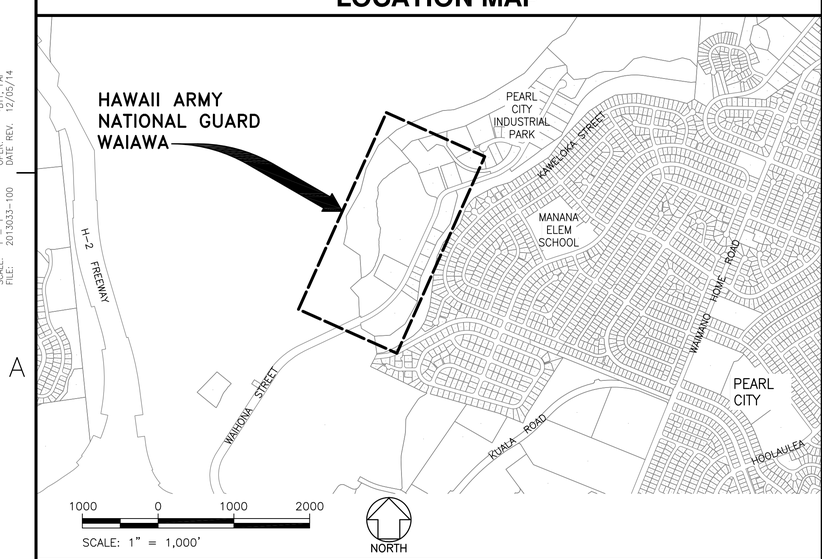

INDEX OF DRAWINGS

SHEET NO.	DWG NO.	DESCRIPTION
1	G-01	TITLE SHEET, LOCATION MAP, VICINITY MAP, AND INDEX OF DRAWINGS
2	G-02	SYMBOLS AND ABBREVIATIONS
3	G-03	GENERAL NOTES, SHEET 1
4	G-04	GENERAL NOTES, SHEET 2
5	G-05	GENERAL LOCATION AND KEY PLAN
6	G-06	EXISTING CONDITIONS PLAN, SHEET 1
7	G-07	EXISTING CONDITIONS PLAN, SHEET 2
8	G-08	EXISTING CONDITIONS PLAN, SHEET 3
9	C-01	DEMOLITION SITE PLAN
10	C-02	GENERAL CIVIL KEY PLAN
11	C-03	SITE PLAN, SHEET 1
12	C-04	SITE PLAN, SHEET 2
13	C-05	SITE PLAN, SHEET 3
14	C-06	FENCE PLOT PLAN PLAN, SHEET 1
15	C-07	FENCE PLOT PLAN PLAN, SHEET 2
16	C-08	TYPICAL SECTIONS, DRAINAGE PLOT PLAN
17	C-09	CIVIL DETAILS, SHEET 1
18	C-10	CIVIL DETAILS, SHEET 2
19	C-11	CIVIL DETAILS, SHEET 3
20	C-12	CIVIL DETAILS, SHEET 4
21	E-01	ELECTRICAL SYMBOLS AND NOTES
22	E-02	SITE ELECTRICAL PLAN
23	E-03	PULLBOX DETAILS
24	E-04	DUCT SECTION DETAILS
25	E-05	ONE-LINE DIAGRAM, PANEL SCHEDULES AND GUARD SHACK DETAIL

HDR

A/E INFO

TONY C.G. LAU
LICENSED PROFESSIONAL ENGINEER
No. 9021-C
HAWAII, U.S.A.

SEAL

SYM	DESCRIPTION	DATE	APPR

SUBMITTAL PHASE: FINAL

SUBMITTAL DATE: 03/02/15

DES ET | DRW BTY | CHK RA

DEPARTMENT OF DEFENSE
DESIGN AND PROJECT MANAGEMENT BRANCH

STATE OF HAWAII
FACILITY MANAGEMENT OFFICE

HAWAII ARMY NATIONAL GUARD
PHYSICAL SECURITY AND IMPROVEMENTS

HIARNG

HONOLULU, HAWAII

WAIAWA
PERIMETER FENCE

TITLE SHEET, LOCATION MAP, VICINITY MAP, AND INDEX OF DRAWINGS

SCALE: AS NOTED

STATE JOB NO. CA-1328-D

FEDERAL PROJECT NO. 15140023

SHEET 1 OF 25

G-01

DATE: 08/28/14
SCALE: 1 = 1
FILE: 2013033-100

PM: TCL
OPER: *BTY, FAI
DATE REV. 12/05/14

LIST OF ABBREVIATIONS

ABAND	ABANDONED
A.C., AC	ASPHALT CONCRETE
A/C	AIR CONDITIONING
APPROX	APPROXIMATE
ARV	AIR RELEASE VALVE
BC	BOTTOM CURB
BFP	BACK FLOW PREVENTER
BLDG	BUILDING
BOT., BOT	BOTTOM
BW	BOTTOM WALL
CATV	CABLE TELEVISION
C.B., CB	CATCH BASIN
C.L.	CHAIN LINK
CMU	CONCRETE MASONRY UNIT
CO	CLEAN OUT
COL.	COLUMN
COMM.	COMMUNICATION
CONC., CONC	CONCRETE
CRM	CONCRETE RUBBLE MASONRY
D	DIAMETER OR DRAIN
D.I.	DRAIN INLET
DS	DOWNSPOUT
DWY.	DRIVEWAY
E, ELEC	ELECTRIC
ELEV., EL., ELEV	ELEVATION
EXIST, E/	EXISTING
F.A. BOX	FIRE ALARM BOX
F.H., FH	FIRE HYDRANT
FM	FORCE MAIN
G	GAS
GMH	GAS MANHOLE
GND., GND	GROUND
G.P.	GUARD POST/GUY POLE/GATE POST
G.W.	GUY WIRE
GV	GATE VALVE
H	HEIGHT
H.B., HB	HOSE BIBB
HH	HAND HOLE
ICV	IRRIGATION CONTROL VALVE
INV., INV	INVERT
JTS	JOINT TRUNKING SYSTEM
LAT	LATERAL
L.P.	LIGHT POLE
MAX., MAX	MAXIMUM
MH	MANHOLE
MIN., MIN	MINIMUM
O/H	OVERHEAD
PAV'T., PAVT	PAVEMENT
P/N	PROJECT NUMBER
P.M.	PARKING METER
P.P.	POWER POLE
PSF	POUNDS PER SQUARE FOOT
PSI	POUNDS PER SQUARE INCH
PSL	PEDESTRIAN SIGNAL LIGHT
REQ'D	REQUIRED
S	SEWER OR SPREAD
SC	SIGNAL CORPS
SCMH	SIGNAL CORPS MANHOLE
SDMH	STORM DRAIN MANHOLE
S.L., SL	STREET LIGHT OR SEWER LINE
SLB	STREET LIGHT BOX
SMH	SEWER MANHOLE
SPR.	SPRINKLER
ST. NAME	STREET NAME
STA., STA	STATION
TC	TOP CURB
TDC	TOP DROP CURB
TEL., TEL	TELEPHONE
TG	TOP OF GRATE
TP	TOP PIPE
TRC	TOP ROLLED CURB
TS	TOP STEM
TV	TOP VALVE
TW	TOP WALL
TYP., TYP	TYPICAL
U.P.	UTILITY POLE
U.P./S.L.	UTILITY POLE W/STREET LIGHT
W	WATER OR WIDTH
WL	WATER LINE
WM	WATER METER
WWF	WELDED WIRE FABRIC
WWH	WATER MANHOLE
WV	WATER VALVE
X-WALK	CROSS WALK

SYMBOLS

EXISTING		NEW
PATCH	A.C. PATCH	ABANDON IN PLACE
BFP	BACKFLOW PREVENTER	REMOVE
B-1	BORING LOCATION	TYPE 1 FENCE
	BUILDING	TYPE 2 FENCE
	CHAIN LINK FENCE	TYPE 3 FENCE
	CONCRETE PAVEMENT	CONCRETE FENCE HEADER
110	CONTOUR LINE	
	CONTROL POINT	PROPERTY LINE
	DIRT ROAD	
D15	DRAIN LINE	
E	ELECTRIC DUCT	
	ELEC MANHOLE	
	ELEC PULLBOX	
FH #115	FIRE HYDRANT	
G.V.	GATE VALVE	
G.P.	GUARD POST	
H.B.	HOSE BIBB	
	LAMP POLE	
S8	SEWER LINE	
SMH	SEWER MANHOLE	
	SIGNS, VARIOUS TYPES	
107.7	SPOT ELEVATION	
	STORM DRAIN INLET	
SDMH	STORM DRAIN MANHOLE	
	TREES, VARIOUS TYPES	
UL	UNDERGROUND LIGHTING	
US	UNDERGROUND SECONDARY ELECTRICAL	
UP	UNDERGROUND PRIMARY ELECTRICAL	
	UTILITY POLE	
W8	WATER LINE	
WV	WATER VALVE	
WM	WATER METER	

CROSS REFERENCING SYSTEM

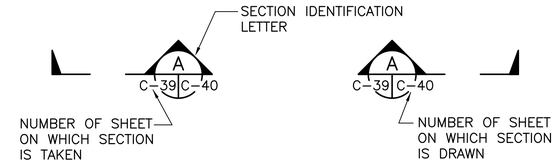

SYMBOL WHERE SECTION IS TAKEN

SECTION A C-39 C-40
SCALE: 1/4" = 1'-0"

SUBTITLE FOR SECTION DRAWING

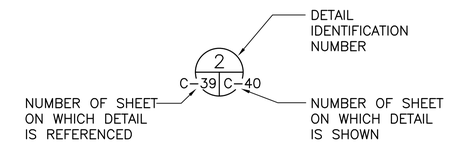

SYMBOL FOR CONDITION FOR WHICH THERE IS A DETAIL

DETAIL 2 C-39 C-40
SCALE: 1/4" = 1'-0"

SUBTITLE FOR DETAIL DRAWING

HAWAII ARMY NATIONAL GUARD

HDR

A/E INFO

TONY C.G. LAU
LICENSED PROFESSIONAL ENGINEER
No. 9021-C
HAWAII, U.S.A.
SEAL

SYM	DESCRIPTION	DATE	APPR

SUBMITTAL PHASE: FINAL

SUBMITTAL DATE: 03/02/15

DES ET | DRW BTY | CHK RA

STATE OF HAWAII
FACILITY MANAGEMENT OFFICE
HIARNG

DEPARTMENT OF DEFENSE
DESIGN AND PROJECT MANAGEMENT BRANCH
HONOLULU, HAWAII

HAWAII ARMY NATIONAL GUARD
PHYSICAL SECURITY AND IMPROVEMENTS

WAIAWA
PERIMETER FENCE

SYMBOLS AND ABBREVIATIONS

SCALE: AS NOTED

STATE JOB NO. CA-1328-D

FEDERAL PROJECT NO. 15140023

SHEET 2 OF 25

G-02

DATE: 08/28/14
SCALE: 1"=30'
FILE: 20130033-101

PM: TCL
OPER: BTY
DATE REV: 02/17/15

GENERAL NOTES:

1. ELEVATIONS SHOWN ARE BASED ON MEAN SEA LEVEL ELEVATION (ELEVATION = 0 FEET).

2. DIMENSIONS TAKE PRECEDENCE OVER SCALE.

3. THE TOPOGRAPHIC SURVEY WAS PREPARED BY CONTROLPOINT SURVEYING INC. DATED MAY 2014 AND SUPPLEMENTARY INFORMATION FROM RECORD DRAWINGS AND FIELD INVESTIGATIONS BY HDR. THE DRAWINGS DO NOT REFLECT SITE CHANGES THAT HAVE OCCURRED SINCE THE TOPOGRAPHIC SURVEY WAS COMPLETED.

4. AZIMUTHS ARE REFERENCED FROM TRUE SOUTH = 0° 00' 00" AND INCREASE CLOCKWISE.

5. DURING NON-WORKING HOURS, ALL TRENCHES AND EXCAVATIONS SHALL BE BARRICADED, COVERED AND/OR MARKED.

6. THE EXISTENCE AND LOCATION OF UNDERGROUND UTILITIES AND STRUCTURES AS SHOWN ON THE PLANS ARE BASED ON THE AVAILABLE DATA. THE CONTRACTOR SHALL TONE THE PROJECT AREA, VERIFY THE LOCATIONS AND DEPTHS OF THE EXISTING UTILITIES SHOWN AND EXERCISE CARE WHEN EXCAVATING IN THE AREA.

   WHEREVER CONNECTIONS AND CROSSINGS OF PROPOSED UTILITIES TO EXISTING UTILITIES ARE SHOWN, THE CONTRACTOR SHALL EXPOSE THE EXISTING LINES AT THE PROPOSED CONNECTIONS TO VERIFY THEIR LOCATIONS AND DEPTHS PRIOR TO EXCAVATION FOR THE NEW LINES. IF UTILITIES NOT SHOWN ARE ENCOUNTERED, OR IF POTENTIAL UTILITY CONFLICTS ARISE, NOTIFY THE PROJECT MANAGER IMMEDIATELY. THE CONTRACTOR SHALL PROVIDE STRUCTURAL SUPPORT FOR ALL EXISTING UTILITY LINES UNCOVERED IN THE TRENCHES.

7. IF EXISTING UTILITIES, WHETHER OR NOT SHOWN ON PLANS, ARE DAMAGED DURING CONSTRUCTION THE CONTRACTOR SHALL REPAIR SUCH UTILITIES AT HIS OWN EXPENSE.

8. CONTRACTOR SHALL, AT HIS OWN EXPENSE, KEEP THE PROJECT AREA AND SURROUNDING AREA FREE FROM DUST NUISANCE AND WITHIN ALLOWABLE NOISE LEVELS. THE WORK SHALL BE IN CONFORMANCE WITH AIR POLLUTION CONTROL STANDARDS AND REGULATIONS OF THE STATE DEPARTMENT OF HEALTH.

9. THE CONTRACTOR SHALL REMOVE ALL SILT AND DEBRIS RESULTING FROM HIS WORK DEPOSITED IN DRAINAGE FACILITIES, ROADWAYS AND OTHER AREAS. THE COSTS INCURRED FOR ANY NECESSARY REMEDIAL ACTION SHALL BE PAYABLE BY THE CONTRACTOR.

10. EXISTING SITE DRAINAGE SYSTEMS SHALL BE FUNCTIONAL AT ALL TIMES.

11. PRIOR TO COMMENCING EXCAVATION, THE CONTRACTOR SHALL NOTIFY THE PROJECT MANAGER. THE CONTRACTOR SHALL COORDINATE, BE HELD RESPONSIBLE AND PAY FOR ALL DAMAGE TO EXISTING UTILITIES AND STRUCTURES. PERSONAL INJURY RESULTING FROM CONTACT WITH THE EXISTING UTILITIES SHALL BE THE CONTRACTOR'S RESPONSIBILITY.

12. EXISTING UTILITIES SHALL REMAIN IN-SERVICE AND IN PLACE. IF RELOCATION OF EXISTING UTILITIES, WHETHER OR NOT SHOWN ON PLANS, IS REQUIRED FOR THE CONTRACTOR'S CONVENIENCE, INTERRUPTION OF SERVICE SHALL BE KEPT TO A MINIMUM AND SHALL BE DONE AT THE CONTRACTOR'S EXPENSE AND ONLY WITH THE APPROVAL OF THE PROJECT MANAGER.

13. IF DEWATERING IS REQUIRED, DISPOSE DEWATERING EFFLUENT WITHOUT DISCHARGE TO WATERS OF THE STATE OF HAWAII, STORM DRAIN SYSTEMS, DRAINAGE SWALES, ETC. THE DEWATERING EFFLUENT WILL NOT BE ALLOWED TO POND, EXCEPT IN AREAS APPROVED BY THE PROJECT MANAGER. IF DISCHARGE OF DEWATERING EFFLUENT IS REQUIRED, CONTRACTOR IS RESPONSIBLE TO OBTAIN A NATIONAL POLLUTANT DISCHARGE ELIMINATION SYSTEM (NPDES) PERMIT PRIOR TO DISCHARGING TO THE STORM DRAINAGE SYSTEM. DEWATERING INTO SANITARY SEWER SYSTEM IS PROHIBITED.

14. THE CONTRACTOR SHALL RESTORE TO THEIR ORIGINAL CONDITION, WHETHER OR NOT SHOWN ON PLANS, ALL IMPROVEMENTS DAMAGED AS A RESULT OF THE CONSTRUCTION, INCLUDING PAVEMENTS, EMBANKMENTS, CURBS, SIGNS, LANDSCAPING, STRUCTURES, UTILITIES, WALLS, FENCES, ETC. UNLESS PROVIDED FOR SPECIFICALLY IN THE PROPOSAL AT CONTRACTOR'S EXPENSE.

15. THE CONTRACTOR SHALL OBTAIN AND PAY FOR ALL PERMITS AND LICENSES REQUIRED. THE CONTRACTOR SHALL CONDUCT ALL TESTS AS REQUIRED BY THE CONSTRUCTION MANAGER AND BE RESPONSIBLE FOR ALL EXPENSES INCURRED IN CONDUCTING THESE TESTS.

16. THE CONTRACTOR SHALL VERIFY AND CHECK ALL DIMENSIONS, ELEVATIONS, AND DETAILS SHOWN ON THE DRAWINGS PRIOR TO START OF CONSTRUCTION. THE CONTRACTOR SHALL IMMEDIATELY NOTIFY THE PROJECT MANAGER OF ANY DISCREPANCY OR CONFLICT FOUND IN THE FIELD PRIOR TO OR DURING THE COURSE OF CONSTRUCTION AND SHALL NOT PROCEED WITH CONSTRUCTION UNTIL THE PROJECT MANAGER RESOLVES THE SAID DISCREPANCY OR CONFLICT. DIMENSIONS AND ELEVATIONS SHOWN ARE BASED ON LIMITED FIELD MEASUREMENTS AND ORIGINAL CONSTRUCTION DRAWINGS. DIMENSIONS AND ELEVATIONS FOR THE NEW WORK SHALL BE ADJUSTED AS REQUIRED BASED ON THE CONTRACTOR'S FIELD MEASUREMENTS WITH THE APPROVAL OF THE PROJECT MANAGER.

GENERAL NOTES (CONTINUED):

17. THE CONTRACTOR SHALL BEAR ALL COSTS ASSOCIATED WITH THE REMOVAL/ AVOIDANCE OF ABANDONED UTILITIES, WHETHER OR NOT SHOWN ON PLANS.

18. THE CONTRACTOR SHALL BE RESPONSIBLE FOR CONFORMANCE WITH THE APPLICABLE PROVISIONS OF THE WATER QUALITY AND WATER POLLUTION CONTROL STANDARDS CONTAINED IN THE HAWAII ADMINISTRATIVE RULES, TITLE 11, CHAPTER 54, "WATER QUALITY STANDARDS" AND TITLE 11, CHAPTER 55, "WATER POLLUTION CONTROL". BEST MANAGEMENT PRACTICES SHALL BE EMPLOYED AT ALL TIMES DURING THE CONSTRUCTION PERIOD.

19. THE CONTRACTOR SHALL OBTAIN AND COMPLY WITH NPDES PERMIT REQUIREMENTS FOR ALL PROJECTS WHICH WILL DISTURB ONE (1) ACRE OR MORE OF LAND. THE CONTRACTOR SHALL NOT START CONSTRUCTION UNTIL NOTICE OF GENERAL PERMIT COVERAGE IS RECEIVED FROM THE DEPARTMENT OF HEALTH, STATE OF HAWAII AND ANY OTHER APPLICABLE REQUIREMENTS OF THE NPDES PERMIT PROGRAM HAVE BEEN MET.

20. IF CAVITIES AND/OR VOIDS ARE ENCOUNTERED DURING EXCAVATION WORK, STOP WORK IMMEDIATELY AND NOTIFY THE PROJECT MANAGER.

21. CONFINE ACTIVITIES WITHIN THE PROJECT LIMITS.

22. PROJECT MANAGER IS THE COORDINATOR BETWEEN THE CONTRACTOR AND ACTIVITY. NOTIFY THE PROJECT MANAGER PRIOR TO CONTACTING THE ACTIVITY. COORDINATE ALL WORK WITH THE PROJECT MANAGER TO ENSURE THAT CONSTRUCTION ACTIVITIES DO NOT INTERFERE WITH BASE OPERATIONS.

23. THE CONTRACTOR SHALL OBSERVE AND COMPLY WITH ALL FEDERAL, STATE AND LOCAL LAWS REQUIRED FOR THE PROTECTION OF PUBLIC HEALTH, SAFETY AND ENVIRONMENTAL QUALITY.

24. EM 385-1-1, SAFETY AND HEALTH REQUIREMENTS, AND WITH ALL APPLICABLE FEDERAL, SAFETY AND LOCAL LAWS REQUIRED FOR THE PROTECTION OF PUBLIC HEALTH, SAFETY AND ENVIRONMENTAL QUALITY. WHERE REQUIREMENTS VARY, THE MOST STRINGENT REQUIREMENTS SHALL APPLY.

25. THE CONTRACTOR SHALL PROVIDE SAFE ACCESS TO AND FROM ALL DRIVEWAYS AND STREETS.

26. THE CONTRACTOR SHALL PLAN OPERATIONS TO MINIMIZE THE AMOUNT OF EXCAVATED TRENCHES LEFT OPEN AT THE END OF EACH WORK DAY WITH THE TOTAL LENGTH OF OPEN TRENCHES NOT TO EXCEED 500 FEET. OPEN TRENCHES SHALL BE COVERED BY NON-SKID STEEL PLATES CAPABLE OF CARRYING H-20 VEHICLES IN TRAFFIC AREAS AND 100 POUNDS PER SQUARED FOOT IN NON-TRAFFIC AREAS. PROVIDE ANCHORING OF THE PLATES IN NON-TRAFFIC AREAS. PROVIDE FLASHING BARRICADES TO DELINEATE COVERED TRENCHES IN NON-TRAFFIC AREAS AND ALL STOCK/SPOIL PILES.

27. WHEREVER EXISTING FENCE IS REMOVED, REINSTALL CHAIN LINK FENCE AS NECESSARY TO SECURE PROTECTED AREAS PRIOR TO THE END OF EACH WORK DAY. TRENCHES CROSSING ANY FENCE, EXISTING OR PROVIDED, SHALL NOT BE LEFT OPEN DURING NON-WORK HOURS. BACKFILL A MINIMUM OF 10 FEET ON EACH SIDE OF FENCE AT THE END OF WORK DAY. OTHER MEASURES MAY BE UTILIZED AS APPROVED BY THE PROJECT MANAGER.

28. CONTRACTOR SHALL COORDINATE WITH PROJECT MANAGER TO HAVE HIARNG WAIAWA COMPLEX PROPERTY LINE ESTABLISHED BY INSTALLING SURVEY PINS/MARKERS AT ALL PROPERTY LINE CORNERS. PROPERTY LINE ESTABLISHMENT OF SURVEY PINS/MARKERS SHALL BE COMPLETED BY A LICENSED PROFESSIONAL LAND SURVEYOR.

29. CONTRACTOR SHALL LOCATE AND VERIFY ALL HIARNG WAIAWA COMPLEX PROPERTY LINE CORNERS AND STAKE PROPERTY LINE OUT PRIOR TO NEW FENCE AND GATE REPLACEMENT AND INSTALLATION. CONTRACTOR SHALL ENSURE THAT NEW FENCES AND GATES ARE INSTALLED WITHIN HIARNG WAIAWA COMPLEX PROPERTY LINE.

ARCHAEOLOGICAL NOTES:

1. PURSUANT TO CHAPTER 6E OF THE HAWAII REVISED STATUTES, ALL CONTRACTORS SHALL ENSURE THAT IN THE EVENT THAT ANY HUMAN SKELETAL REMAINS ARE INADVERTENTLY DISCOVERED DURING CONSTRUCTION, THE REMAINS SHALL NOT BE MOVED AND ANY ACTIVITY IN THE IMMEDIATE AREA THAT COULD DAMAGE THE REMAINS OR THE POTENTIAL HISTORIC SITE SHALL CEASE AND THE DEPARTMENT OF LAND AND NATURAL RESOURCES' HISTORIC PRESERVATION DIVISION (TELEPHONE: 243-5119), THE APPROPRIATE MEDICAL EXAMINER OR CORONER, AND THE POLICE DEPARTMENT (TELEPHONE: 244-6400), SHALL BE CONTACTED. SEE SECTION 00710, "GENERAL CONDITIONS", PARAGRAPH 6.6, "UNAVOIDABLE DELAYS" IF ARCHAEOLOGICAL FINDINGS RESULT IN UNAVOIDABLE DELAYS TO THE PROJECT.

2. CAREFULLY PROTECT IN-PLACE AND REPORT IMMEDIATELY TO THE PROJECT MANAGER HISTORICAL AND ARCHAEOLOGICAL ITEMS, HUMAN SKELETAL REMAINS, STONE WALLS, STONE TOOLS, SHELL MIDDENS OR CHARCOAL DEPOSITS DISCOVERED IN THE COURSE OF WORK. STOP WORK IN THE IMMEDIATE AREA OF THE DISCOVERY UNTIL DIRECTED BY THE PROJECT MANAGER TO RESUME WORK. THE PROJECT MANAGER MAY REQUIRE THE CONTRACTOR TO RELOCATE TO OTHER PORTIONS OF THE PROJECT WHILE RECOVERY OPERATIONS, IF NECESSARY, ARE CONDUCTED. THE CONTRACTOR SHALL FOLLOW THE DIRECTIONS OF THE HIARNG ENVIRONMENTAL BRANCH SHOULD ARTIFACTS AND BURIALS BE DISCOVERED.

3. THE GOVERNMENT RETAINS OWNERSHIP AND CONTROL OVER HISTORICAL AND ARCHAEOLOGICAL RESOURCES.

TRAFFIC CONTROL NOTES:

1. THE CONTRACTOR SHALL PROVIDE AND MAINTAIN ALL NECESSARY SIGNS, LIGHTS, FLARES, BARRICADES, MARKERS, CONES, AND OTHER PROTECTIVE FACILITIES SHALL CONFORM WITH THE TRAFFIC REGULATIONS "ADMINISTRATIVE RULES OF HAWAII GOVERNING THE USE OF TRAFFIC CONTROL DEVICES AT WORK SITES ON OR ADJACENT TO PUBLIC STREETS AND HIGHWAYS", ADOPTED BY THE DIRECTOR OF TRANSPORTATION, AND THE CURRENT U.S. FEDERAL HIGHWAY ADMINISTRATION "MANUAL ON UNIFORM TRAFFIC CONTROL DEVICES FOR STREETS AND HIGHWAYS, PART VI – STANDARDS AND GUIDES FOR TRAFFIC CONTROLS FOR STREET AND HIGHWAY CONSTRUCTION, MAINTENANCE, UTILITY, AND INCIDENT MANAGEMENT OPERATIONS".

2. ALL LANES SHALL BE OPENED TO TRAFFIC DURING THE MORNING PEAK HOURS OF 6:30 A.M. TO 8:30 A.M. AND DURING THE AFTERNOON PEAK HOURS FROM 3:00 P.M. TO 5:00 P.M. DURING WORKING HOURS, TWO LANES OF TRAFFIC SHALL BE OPEN AT ALL TIMES. FOR STREETS WITH TWO LANES, ONLY ONE LANE OF TRAFFIC SHALL BE CLOSED AT ANY ONE TIME. THE CONTRACTOR SHALL PROVIDE AT LEAST TWO FLAGMEN TO DIRECT ALTERNATING TRAFFIC IN THE OPEN LANE. THE CONTRACTOR SHALL PROVIDE ONE LANE FOR TRAFFIC ACCESS TO ALL DRIVEWAYS, PARKING AREAS, ETC. AT ALL TIMES.

3. DURING NON-WORKING HOURS, ALL LANES SHALL BE OPEN TO TRAFFIC. ALL TRENCHES SHALL BE COVERED WITH NON-SKID BRIDGING MATERIAL WITH SUITABLE MATERIAL AT THE EDGES TO PROVIDE A SMOOTH TRANSITION.

4. WHEREVER PEDESTRIAN WALKWAYS EXIST, THEY SHALL BE MAINTAINED IN PASSABLE CONDITION OR OTHER FACILITIES FOR PEDESTRIANS SHALL BE PROVIDED. PASSAGE BETWEEN WALKWAYS AT INTERSECTIONS SHALL LIKEWISE BE PROVIDED.

5. THE CONTRACTOR SHALL REPLACE OR REPAIR ALL TRAFFIC SIGNS, POSTS, AND MARKINGS DISTURBED BY THE CONTRACTOR'S ACTIVITIES TO EXISTING CONDITIONS OR BETTER.

6. THE CONTRACTOR SHALL COORDINATE ALL TRAFFIC CONTROL PLANS WITH THE PROJECT MANAGER.

DATE: 08/28/14
SCALE:
FILE: 2013033-102
PM: TCL
DPE: ET
DATE REV. 12/04/14

A/E INFO

LICENSED PROFESSIONAL ENGINEER
No. 9021-C
TONY C.G. LAU
HAWAII, U.S.A.
SEAL

SYM	DESCRIPTION	DATE	APPR

SUBMITTAL PHASE: FINAL
SUBMITTAL DATE: 03/02/15
DES: ET | DRW: BTY | CHK: RA

DEPARTMENT OF DEFENSE
DESIGN AND PROJECT MANAGEMENT BRANCH
HONOLULU, HAWAII

STATE OF HAWAII
FACILITY MANAGEMENT OFFICE
HIARNG

HAWAII ARMY NATIONAL GUARD
PHYSICAL SECURITY AND IMPROVEMENTS

WAIAWA
PERIMETER FENCE

GENERAL NOTES, SHEET 1

SCALE: AS NOTED
STATE JOB NO. CA-1328-D
FEDERAL PROJECT NO. 15140023
SHEET 3 OF 25
G-03

ACCESS TO PROJECT SITE AND MAINTAINING HAWAII NATIONAL GUARD AREA PERIMETER SECURITY NOTES:

1. THE PROJECT IS GENERALLY LOCATED WITHIN A SECURED PERIMETER AREA HOUSING THE HAWAII ARMY NATIONAL GUARD WAIAWA COMPLEX. THE SECURED PERIMETER RUNS ALONG WAIHONA STREET. VEHICLE ACCESS IS CONTROLLED BY MAIN GATE WAIHONA STREET NEAR BUILDING 23317.

2. CONTRACTOR SHALL BE RESPONSIBLE TO COORDINATE WITH THE PROJECT MANAGER IMPACTS AND DISRUPTION TO GATE FACILITIES AND OPERATION(S). TEMPORARY RELOCATION OF GATE SECURITY FACILITIES AND TEMPORARY ACCESS CONTROL MAY BE BY THE HAWAII NATIONAL GUARD OR BY THE CONTRACTOR AS DIRECTED. CONTRACTOR SHALL BE RESPONSIBLE FOR ALL COSTS FOR TEMPORARY AND RESTORATION WORK, AND SHALL BE PROVIDED AT NO ADDITIONAL COST TO THE CONTRACT. TEMPORARY ACCESS VIA OTHER AVAILABLE GATES SHALL BE COORDINATED WITH THE PROJECT MANAGER AND SHALL BE PROVIDED FOR BY THE CONTRACTOR AS DIRECTED.

3. CONTRACTOR SHALL BE RESPONSIBLE TO RESTORE ALL GATE FACILITIES AND OPERATIONS BACK TO ORIGINAL CONDITIONS AND AS DIRECTED AT NO ADDITIONAL COST TO THE CONTRACT.

4. CONTRACTOR SHALL COORDINATE ACCESS FOR ALL CONTRACTOR PERSONNEL, VEHICLES, EQUIPMENT, AND DELIVERIES, AND SHALL OBTAIN ALL PERMISSIONS, CLEARANCES, PASSES, ETC. AS REQUIRED FROM THE HAWAII ARMY NATIONAL GUARD. CONSTRUCTION VEHICULAR TRAFFIC SHALL BE ONLY VIA GATES AS DIRECTED BY THE HAWAII ARMY NATIONAL GUARD.

5. CONTRACTOR SHALL COORDINATE WITH THE PROJECT MANAGER DESIGNATION BY THE HAWAII NATIONAL GUARD OF SITE(S) WITHIN THE SECURED AREA FOR THE CONTRACTOR FIELD OFFICE AND BASE YARD.

EROSION/TEMPORARY DUST CONTROL NOTES:

1. DURING CONSTRUCTION, PREVENTIVE MEASURES SHALL BE USED TO CONTROL FORESEEABLE DUST, EROSION OR SEDIMENTATION PROBLEMS WHICH MAY ARISE AS WORK PROGRESSES.

2. FUGITIVE DUST AND SOLID WASTE DISPOSAL DURING GRUBBING AND GRADING ACTIVITIES SHALL MEET THE REQUIREMENTS OF STATE OF HAWAII ADMINISTRATIVE RULES, TITLE 11, CHAPTER 60, AIR POLLUTION CONTROL AND CHAPTER 56, SOLID WASTE MANAGEMENT CONTROL.

3. ALL AREAS WHICH ARE AT FINAL GRADE SHALL BE IMMEDIATELY HYDROMULCHED AND SEEDED WITH COMMON BERMUDA GRASS AT A RATE OF 5 POUNDS PER 1000 SQUARE FEET OR PERMANENTLY LANDSCAPED.

4. ALL EXPOSED AREAS WHICH ARE NOT AT FINAL GRADE AND WHICH ARE TO BE LEFT EXPOSED LONGER THAN 6 WEEKS SHALL BE HYDROMULCHED AND SEEDED WITH COMMON BERMUDA GRASS.

5. REGRASS ALL EXPOSED AREAS.

HAWAII ARMY NATIONAL GUARD ENVIRONMENTAL COMPLIANCE NOTES:

1. IN ORDER TO FACILITATE EMERGENCY PLANNING AND COMMUNITY RIGHT–TO–KNOW ACT (EPCRA) REPORTING REQUIREMENTS, PRIOR TO PROJECT START AND WITHIN 30 DAYS OF COMPLETION OF THE PROJECT, CONTRACTOR SHALL SUBMIT TO HIARNG–ENV A HAZARDOUS MATERIAL INVENTORY LOG OF CHEMICAL PRODUCTS TO BE USED IN THE PROJECT, AND PROVIDE AN UPDATE NO LATER THAN 31 JANUARY OF EACH CALENDAR YEAR. THE LOG SHALL INCLUDE THE PRODUCT NAME AND MANUFACTURER ID NUMBER, CONTAINER SIZE, AMOUNT USED, AND MAXIMUM NUMBER OF CONTAINERS TO BE STORED ON SITE AT ANY GIVEN DAY DURING THE PROJECT. HIARNG–ENV MAY WAIVE THIS REQUIREMENT BASED UPON CONTRACTOR REQUEST. SAFETY DATA SHEETS (SDSs) SHALL BE PROVIDED OR MADE AVAILABLE TO THE PROJECT MANAGER AND HIARNG–ENV UPON REQUEST.

2. PRIOR TO PROJECT START, CONTRACTOR WILL PROVIDE TO HIARNG–ENV AND THE COR/PROJECT MANAGER AN ESTIMATE OF THE MAXIMUM AMOUNT OF HAZARDOUS WASTE, UNIVERSAL WASTE, AND OTHER REGULATED WASTE (E.G., ASBESTOS, LEAD PAINT CHIPS, FLUORESCENT LAMPS, PCB BALLASTS) EXPECTED TO BE GENERATED PER MONTH, AND THE TOTAL AMOUNT ANTICIPATED TO BE STORED ON–SITE AT ANY GIVEN TIME. CONTRACTOR SHALL ALSO PROVIDE NAME OF DISPOSAL/RECYCLING FACILITIES AND TRANSPORTERS TO BE USED FOR HAZARDOUS WASTE, INCLUDING THEIR EPA ID NUMBERS; DISPOSAL/RECYCLING FACILITIES AND TRANSPORTERS USED MUST BE LISTED ON DRMS's LISTS OF QUALIFIED FACILITIES AND QUALIFIED TRANSPORTERS AT http://www.dispositionservices.dla.mil/newenv/hwdisposal.shtml. ALL WASTE WILL BE STORED IN A SECURED AREA PENDING REMOVAL FOR DISPOSAL, WITH SIGNAGE INDICATING CONTACT INFORMATION, AND SHALL BE MANAGED, PACKAGED, AND TRANSPORTED IN ACCORDANCE WITH ALL APPLICABLE FEDERAL, STATE, AND LOCAL REGULATIONS. MONTHLY WASTE GENERATION REPORTS SHALL BE PROVIDED TO HIARNG–ENV AND THE PROJECT MANAGER BY THE 5TH OF THE MONTH AFTER THE END OF THE MONTH BEING REPORTED. THE REPORTS SHALL INDICATE THE TYPE OF WASTE AND THE NUMBER OF POUNDS OF EACH TYPE GENERATED IN EACH CONTAINER EACH MONTH.

3. CONTRACTOR SHALL BE RESPONSIBLE FOR ALL COSTS FOR DISPOSAL OF WASTE GENERATED FROM THIS PROJECT AND SHALL PROVIDE COPIES OF ALL WASTE DISPOSAL DOCUMENTATION (INCLUDING ANY REQUIRED LAB ANALYSES, WASTE PROFILES, AND ANY OTHER SUPPORTING DOCUMENTATION) TO THE HIARNG–ENV AND THE PROJECT MANAGER, ALONG WITH DRAFT COPIES OF THE WASTE MANIFESTS FOR REVIEW PRIOR TO WASTE SHIPMENT OFF–SITE FOR DISPOSAL. THE APPLICABLE HIARNG EPA ID NUMBER SHALL BE USED ON WASTE MANIFESTS, AND MANIFESTS WILL ONLY BE SIGNED BY INDIVIDUALS AUTHORIZED BY HIARNG–ENV.

HAWAII ARMY NATIONAL GUARD ENVIRONMENTAL COMPLIANCE NOTES (CONTINUED):

4. ALL CONSTRUCTION SITES ARE SUBJECT TO THE REGULATIONS OF 40 CFR 112 OIL POLLUTION PREVENTION AND ARE REQUIRED TO PREPARE A SITE SPECIFIC SPILL PREVENTION, CONTROL AND COUNTERMEASURE (SPCC) PLAN IF STORING MORE THAN 1320 GALLONS (G) OF POL ON SITE. A COPY OF THE SPCC PLAN MUST BE SUBMITTED TO HIARNG–ENV BEFORE START OF THE PROJECT AND KEPT READILY AVAILABLE ON SITE. IF THE SITE IS STORING LESS THAN 1320 G OF POL NO SPCC PLAN IS REQUIRED, HOWEVER, THE CONTRACTOR SHALL IMPLEMENT THE APPLICABLE HIARNG SPCC PLAN.

5. CONTRACTOR, IN GENERAL, SHALL BE RESPONSIBLE FOR ASSESSING WHETHER THE PROJECT AND/OR PROJECT ACTIVITIES REQUIRE ENVIRONMENTAL PERMITS AND ARE RESPONSIBLE FOR OBTAINING, IMPLEMENTING AND MAINTAINING ALL APPLICABLE PERMIT REQUIREMENTS.

6. ALL PROJECTS THAT DISTURB MORE THAN 1 ACRE OF SOIL, INCLUDING PROJECTS THAT, CONSIDERED WITH OTHER RELATED PROJECTS (I.E., ARE PART OF A LARGER COMMON PLAN OF DEVELOPMENT OR SALE), CUMULATIVELY DISTURB MORE THAN 1 ACRE OF SOIL, ARE REQUIRED TO OBTAIN AN APPLICABLE POLLUTANT DISCHARGE ELIMINATION SYSTEM (NPDES) STORMWATER DISCHARGE PERMIT FRON THE HAWAII DEPARTMENT OF HEALTH (HDOH) AND IMPLEMENT ALL PERMIT REQUIREMENTS, PLANS, AND INSPECTIONS. SITES LESS THAN 1 ACRE ARE REQUIRED TO IMPLEMENT BEST MANAGEMENT PRACTICES (BMP'S) TO PREVENT CONTAMINATED STORMWATER FROM LEAVING THE SITE.

7. CONTRACTORS SHALL BE RESPONSIBLE FOR DETERMINING THE NEED FOR AND OBTAINING ANY ALL REQUIRED ENVIRONMENTAL PERMITS, E.G. NPDES PERMITS FOR CONSTRUCTION ACTIVITY, UNDERGROUND INJECTION CONTROL WELL (UIC), COUNT–REQUIRED INDUSTRIAL WASTEWATER DISCHARGE PERMITS, MINOR POLLUTION SOURCE AIR PERMITS, ETC. FOR ANY CONTRACT–RELATED WORK. THE HIANG ENV OFFICE SHALL BE COPIED ON ALL PERMIT CORRESPONDENCE, AND SHALL BE PROVIDED THE ORIGINAL COPY OF ALL PERMITS.

8. CONTRACTORS ARE REQUIRED TO INSTALL AND MAINTAIN STORMWATER BEST MANAGEMENT PRACTICES (BMPs) AND PROTECTIVE MEASURES (REGARDLESS OF PROJECT SIZE OR SCOPE) TO PREVENT THE POLLUTION OF STORMWATER TO THE MAXIMUM EXTENT PRACTICABLE (MEP).

9. CONTRACTOR SHALL BE RESPONSIBLE FOR COMPLYING WITH ALL EXISTING AND APPLICABLE HIARNG ENVIRONMENTAL PERMITS, E.G., NATIONAL POLLUTANT DISCHARGE ELIMINATION SYSTEM (NPDES) PERMITS, UIC PERMITS, INDUSTRIAL WASTEWATER DISCHARGE PERMITS (IWDPs), INDIVIDUAL WASTEWATER SYSTEM (IWS) PERMITS, ETC.

10. CONTRACTOR SHALL POST EMERGENCY CONTACT SIGN INDICATING THE NAME AND PHONE NUMBER FOR THE PROJECT MANAGER, THE CONTRACTOR EMERGENCY CONTACT, POLICE/FIRE DEPARTMENT 911, AND HIARNG ENV 672–1013. CONTRACTOR SHALL REPORT SPILLS IMMEDIATELY TO THE COR AND HIARNG–ENV AND COMPLETE THE HIARNG SPILL INCIDENT REPORT FORM AS REQUIRED. CONTRACTOR SHALL IMMEDIATELY CLEAN UP ALL SPILLS IAW FEDERAL AND STATE GUIDELINES AND TO THE SATISFACTION OF HIARNG–ENV. CONTRACTOR SHALL MAINTAIN ADEQUATE SPILL SUPPLIES COMMENSURATE WITH THE POTENTIAL FOR SPILLS, AND WILL CONTRACT OUT SPILL CLEANUP BEYOND THEIR CAPABILITIES. CONTRACTOR SHALL ACCOMPLISH ALL REGULATORY VERBAL AND WRITTEN NOTIFICATIONS TO THE STATE EMERGENCY RESPONSE COMMISION, LOCAL EMERGENCY PLANNING COMMITTEE (LEPC), NATIONAL RESPONSE CENTER (NRC), ENVIRONMENTAL PROTECTION AGENCY (EPA), AS APPLICABLE, AND PROVIDE HIARNG–ENV COPIES OF ALL SPILL REPORTS SUBMITTED.

11. SEND TO HIARNG–ENV THE DATA FOR NON–HAZARDOUS RECYCLED/DIVERTED WASTE (I.E. WASTE THAT DOES NOT GO INTO THE LANDFILL OR H–POWER) AND NON–HAZARDOUS DISPOSED WASTE FOR ALL CONSTRUCTION PROJECTS. DATA CAN BE PROVIDED BY ANY MEANS (E.G. RECEIPT COPIES, EXCEL TABLE, EMAIL MESSAGE)

    DATA SHOULD INCLUDE:

    RECYCLED/DIVERTED WASTE

    - TYPE OF MATERIAL
    - NET WEIGHT
    - RECYCLE FACILITY (E.G. SCHNITZER, ISLAND RECYCLING, REFRIGERANT RECYCLING)
    - TICKET NUMBER (IF AVAILABLE)
    - COST/REVENUE (IF APPLICABLE)

    DISPOSED WASTE

    - NET WEIGHT
    - DISPOSAL FACILITY (E.G. PVT, SCHNITZER)
    - TICKET NUMBER (IF AVAILABLE)
    - COST (IF APPLICABLE)

HAWAII ARMY NATIONAL GUARD SOLID WASTE CONSTRUCTION NOTES:

1. THE CONTRACTOR SHALL SUBMIT SOLID WASTE REPORTS TO THE HIARNG PROJECT MANAGER FOR THE DURATION OF THE PROJECT. THE REPORTS SHALL ADDRESS:

    A. DIVERTED WASTE (I.E. WASTE THAT DOES NOT GO INTO LANDFILL)

    B. RECYCLED WASTE

    C. LANDFILL WASTE

    D. RECOVERED WASTE (I.E. FREON FROM AC EQUIPMENT AND REFRIGERATORS

2. THE CONTRACTOR SHALL SUBMIT LEGIBLE COPIES OF DUMP TICKET RECEIPT FROM VENDOR SHOWING THE TONNAGE OF WASTE TO THE HIARNG PROJECT MANAGER. IF WASTE PRODUCTS ARE COMBINED WITH OTHER PROJECTS, THE CONTRACTOR SHALL PROVIDE A BREAKDOWN PER PROJECT.

SLOPE CLEARING NOTES:

1. THE CONTRACTOR SHALL BE RESPONSIBLE FOR CLEARING OF TREES, BRUSH, AND OTHER VEGETATION ON THE SOUTHWEST SLOPE OF THE HIARNG PROPERTY. CLEARING SHALL BE WITHIN THE HIARNG PROPERTY.

2. TREES, STUMPS, ROOTS, BRUSH AND OTHER VEGETATION SHALL BE CUT OFF FLUSH WITH THE ORIGINAL GROUND SURFACE.

3. CLEARED MATERIAL FROM THE HIARNG PROPERTY SHALL BECOME PROPERTY OF THE CONTRACTOR, AND SHALL BE REMOVED FROM THE HIARNG PROPERTY AND DISPOSED OF IN ACCORDANCE WITH APPLICABLE LOCAL AND STATE LAWS.

A/E INFO

LICENSED PROFESSIONAL ENGINEER
TONY C.G. LAU
No. 9021-C
HAWAII, U.S.A.

SEAL

SYM	DESCRIPTION	DATE	APPR

SUBMITTAL PHASE: FINAL

SUBMITTAL DATE: 03/02/15

DES: ET | DRW: BTY | CHK: RA

DEPARTMENT OF DEFENSE
DESIGN AND PROJECT MANAGEMENT BRANCH

STATE OF HAWAII
FACILITY MANAGEMENT OFFICE
HIARNG

HAWAII ARMY NATIONAL GUARD
PHYSICAL SECURITY AND IMPROVEMENTS

HONOLULU, HAWAII

WAIAWA
PERIMETER FENCE

GENERAL NOTES, SHEET 2

SCALE: AS NOTED

STATE JOB NO. CA–1328–D

FEDERAL PROJECT NO. 15140023

SHEET 4 OF 25

G-04

DATE: 08/28/14
SCALE: 1 = 1
FILE: 2013033–103

PM: TCL
OPER: FALBTY
DWE REV: –

TRUE NORTH

HORIZ/VERT CONTROL POINT DATA				
STA	DESCRIPTION	ELEVATION	AZIMUTH	DISTANCE
53	"Y" CUT	49.76		
			143° 24' 02"	137.79
58	MAG NAIL	49.14		
			143° 24' 03"	161.88
57	"Y" CUT	50.30		
			143° 24' 28"	102.87
54	"Y" CUT	50.28		
			208° 47' 49"	545.17
69	REBAR	53.04		
			195° 56' 06"	165.29
77	MAG NAIL	57.41		
			195° 56' 05"	251.26
76	"Y" CUT	69.17		
			184° 03' 12"	465.89
80	MAG NAIL	87.35		
			235° 53' 01"	346.08
82	REBAR	89.77		

HORIZ/VERT CONTROL POINT DATA				
STA	DESCRIPTION	ELEVATION	AZIMUTH	DISTANCE
82	REBAR	89.77		
			331° 59' 55"	390.59
83	MAG NAIL	85.55		
			354° 19' 01"	411.35
59	"Y" CUT	69.50		
			24° 06' 37"	166.22
60	"Y" CUT	61.03		
			24° 06' 37"	228.61
61	"Y" CUT	54.44		
			24° 06' 37"	309.05
55	1/2" PIPE	51.27		
			33° 24' 57"	215.23
56	"+" CUT	48.94		
			44° 01' 38"	394.95
53	"Y" CUT	49.76		

HORIZ/VERT CONTROL POINT DATA				
STA	DESCRIPTION	ELEVATION	AZIMUTH	DISTANCE
57	"Y" CUT	50.30		
			212° 11' 54"	274.53
67	"Y" CUT	51.16		
			301° 37' 07"	178.63
68	MAG NAIL	50.22		
			212° 44' 47"	300.20
62	MAG NAIL	53.15		
			326° 35' 16"	201.39
55	1/2" PIPE	51.27		
			33° 24' 57"	215.23
56	"+" CUT	48.94		
			44° 01' 38"	394.95
53	"Y" CUT	49.76		
			143° 24' 02"	137.79
58	MAG NAIL	49.14		
			143° 24' 03"	161.88
57	"Y" CUT	50.30		

HORIZ/VERT CONTROL POINT DATA				
STA	DESCRIPTION	ELEVATION	AZIMUTH	DISTANCE
76	"Y" CUT	69.17		
			205° 06' 41"	415.29
75	REBAR	79.72		
			210° 59' 37"	286.98
79	MON SPIKE	86.06		
			15° 25' 46"	176.42
81	MAG NAIL	84.05		
			291° 04' 52"	166.87
87	HUB	–		
			291° 04' 52"	241.29
59	"Y" CUT	69.50		
			174° 19' 01"	411.35
83	MAG NAIL	85.55		
			151° 59' 55"	390.59
82	REBAR	89.77		
			55° 53' 01"	346.08
80	MAG NAIL	87.35		
			4° 03' 12"	465.89
76	"Y" CUT	69.17		

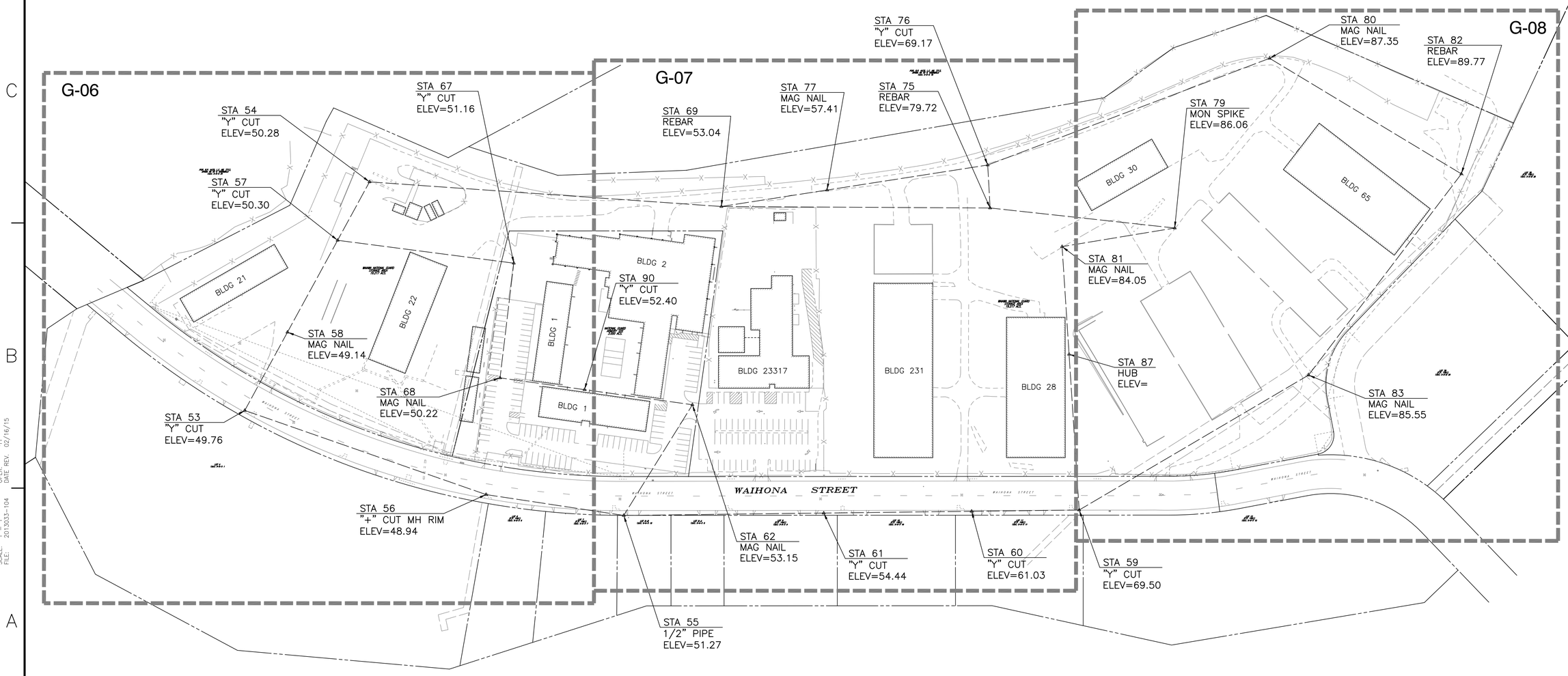

GENERAL LOCATION AND KEY PLAN

SCALE: 1" = 80'

LEGEND:

40' SCALE SHEET LOCATION

GRAPHIC SCALE:

80' 40' 0 80' 160'

SCALE: 1" = 80'

DATE: 08/28/14
SCALE: 1" = 80'
FILE: 2013033-104

PM: TCL
OFFER: FT
DATE REV: 02/16/15

HAWAII ARMY NATIONAL GUARD

HDR

A/E INFO

TONY C.G. LAU
LICENSED PROFESSIONAL ENGINEER
No. 9021-C
HAWAII, U.S.A.

SEAL

SYM	DESCRIPTION	DATE	APPR

SUBMITTAL PHASE: FINAL

SUBMITTAL DATE: 03/02/15

DES: ET DRW: BTY CHK: RA

DEPARTMENT OF DEFENSE
DESIGN AND PROJECT MANAGEMENT BRANCH

HAWAII ARMY NATIONAL GUARD
PHYSICAL SECURITY AND IMPROVEMENTS

HONOLULU, HAWAII

WAIAWA
PERIMETER FENCE

GENERAL LOCATION AND KEY PLAN

STATE OF HAWAII
FACILITY MANAGEMENT OFFICE

HIARNG

SCALE: AS NOTED

STATE JOB NO. CA-1328-D

FEDERAL PROJECT NO. 15140023

SHEET 5 OF 25

G-05

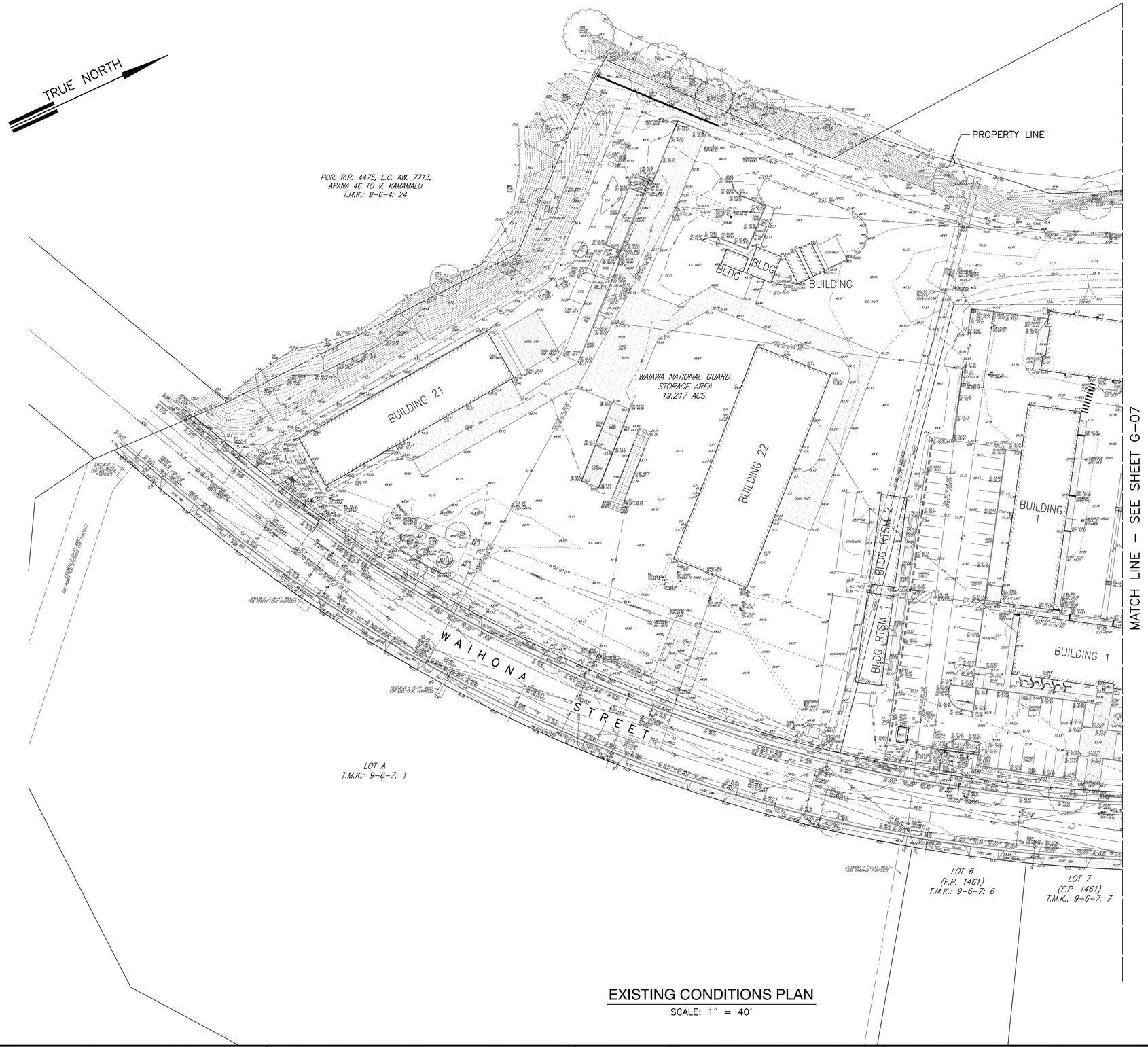

EXISTING CONDITIONS PLAN

SCALE: 1" = 40'

GRAPHIC SCALE:

40' 20' 0 40' 80'

SCALE: 1" = 40'

HAWAII ARMY NATIONAL GUARD

HDR

A/E INFO

TONY C.G. LAU
LICENSED PROFESSIONAL ENGINEER
No. 9021-C
HAWAII, U.S.A.

SEAL

SYM	DESCRIPTION	DATE	APPR

SUBMITTAL PHASE: FINAL

SUBMITTAL DATE: 03/02/15

DES: ET DRW: BTY CHK: RA

DEPARTMENT OF DEFENSE
DESIGN AND PROJECT MANAGEMENT BRANCH

HAWAII ARMY NATIONAL GUARD
PHYSICAL SECURITY AND IMPROVEMENTS

HONOLULU, HAWAII

WAIAWA PERIMETER FENCE

EXISTING CONDITIONS PLAN, SHEET 1

STATE OF HAWAII
FACILITY MANAGEMENT OFFICE

HIARNG

SCALE: AS NOTED

STATE JOB NO. CA-1328-D

FEDERAL PROJECT NO. 15140023

SHEET 6 OF 25

G-06

FILE: 20130133-106
DATE: 01/03/14

OPER: *FM
DATE REV.: 02/16/15

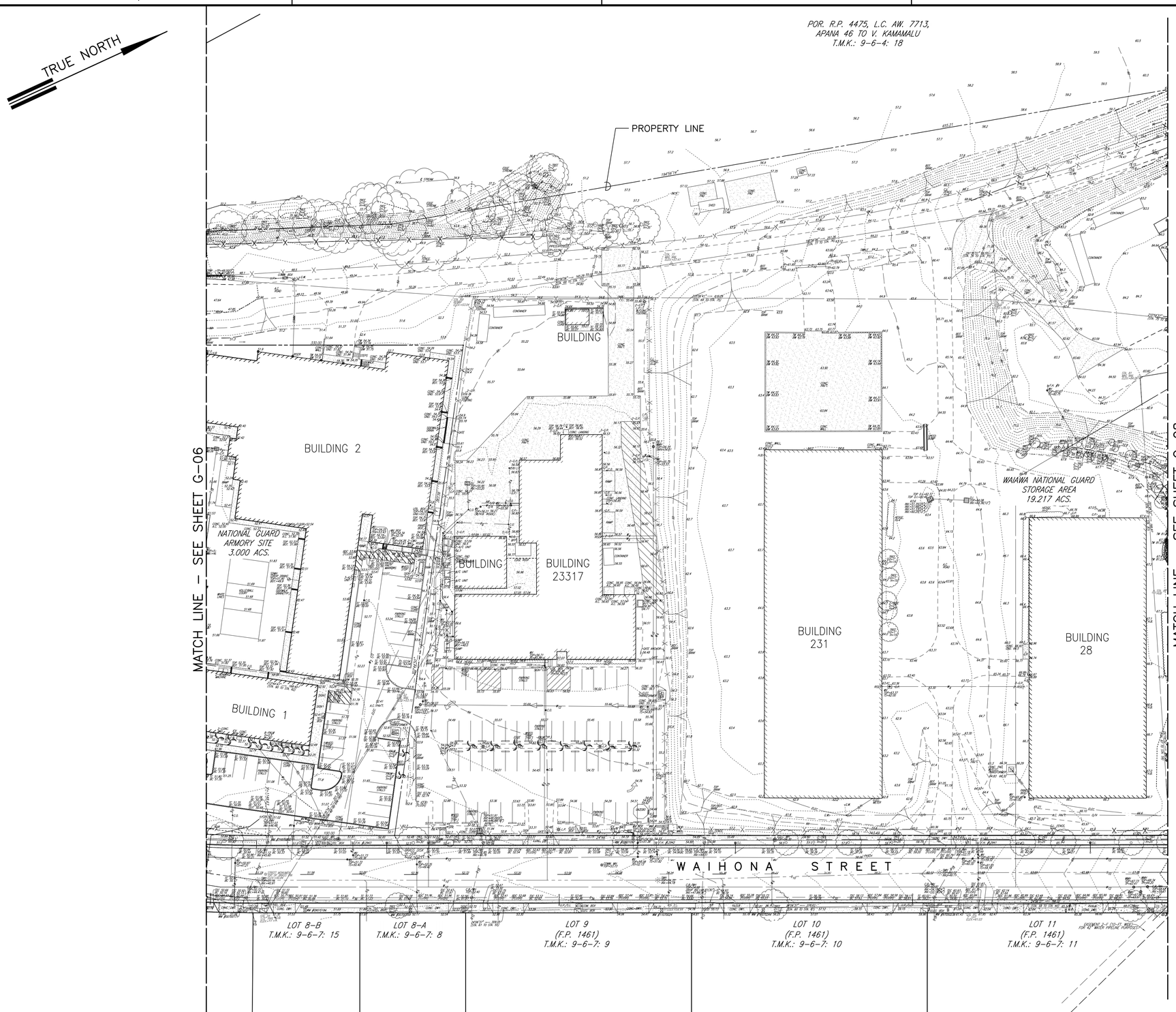

EXISTING CONDITIONS PLAN

SCALE: 1" = 40'

GRAPHIC SCALE:

40' 20' 0 40' 80'

SCALE: 1" = 40'

HAWAII ARMY NATIONAL GUARD

HDR

A/E INFO

TONY C. G. LAU
LICENSED PROFESSIONAL ENGINEER
No. 9021-C
HAWAII, U.S.A.

SEAL

SYM	DESCRIPTION	DATE	APPR

SUBMITTAL PHASE: FINAL

SUBMITTAL DATE: 03/02/15

DES: ET | DRW: BTY | CHK: RA

DEPARTMENT OF DEFENSE
DESIGN AND PROJECT MANAGEMENT BRANCH
HONOLULU, HAWAII

STATE OF HAWAII
FACILITY MANAGEMENT OFFICE
HIARNG

HAWAII ARMY NATIONAL GUARD
PHYSICAL SECURITY AND IMPROVEMENTS

WAIAWA PERIMETER FENCE

EXISTING CONDITIONS PLAN, SHEET 2

SCALE: AS NOTED

STATE JOB NO. CA-1328-D

FEDERAL PROJECT NO. 15140023

SHEET 7 OF 25

G-07

FILE: 2013033-107
DATE: 01/03/14

OPER: *FN
DATE REV: 02/16/15

EXISTING CONDITIONS PLAN

SCALE: 1" = 40'

GRAPHIC SCALE:

40' 20' 0 40' 80'

SCALE: 1" = 40'

HAWAII ARMY NATIONAL GUARD

HDR

A/E INFO

TONY C.G. LAU
LICENSED PROFESSIONAL ENGINEER
No. 9021-C
HAWAII, U.S.A.

SEAL

SYM	DESCRIPTION	DATE	APPR

SUBMITTAL PHASE: FINAL

SUBMITTAL DATE: 03/02/15

DES: ET | DRW: BTY | CHK: RA

STATE OF HAWAII
FACILITY MANAGEMENT OFFICE
HIARNG

DEPARTMENT OF DEFENSE
DESIGN AND PROJECT MANAGEMENT BRANCH
HONOLULU, HAWAII

HAWAII ARMY NATIONAL GUARD
PHYSICAL SECURITY AND IMPROVEMENTS

WAIAWA
PERIMETER FENCE

EXISTING CONDITIONS PLAN, SHEET 3

SCALE: AS NOTED

STATE JOB NO. CA-1328-D

FEDERAL PROJECT NO. 15140023

SHEET 8 OF 25

G-08

FILE: 2013033-108
DATE: 10/15/14
OPER: *FAI
DATE REV.: 02/16/15

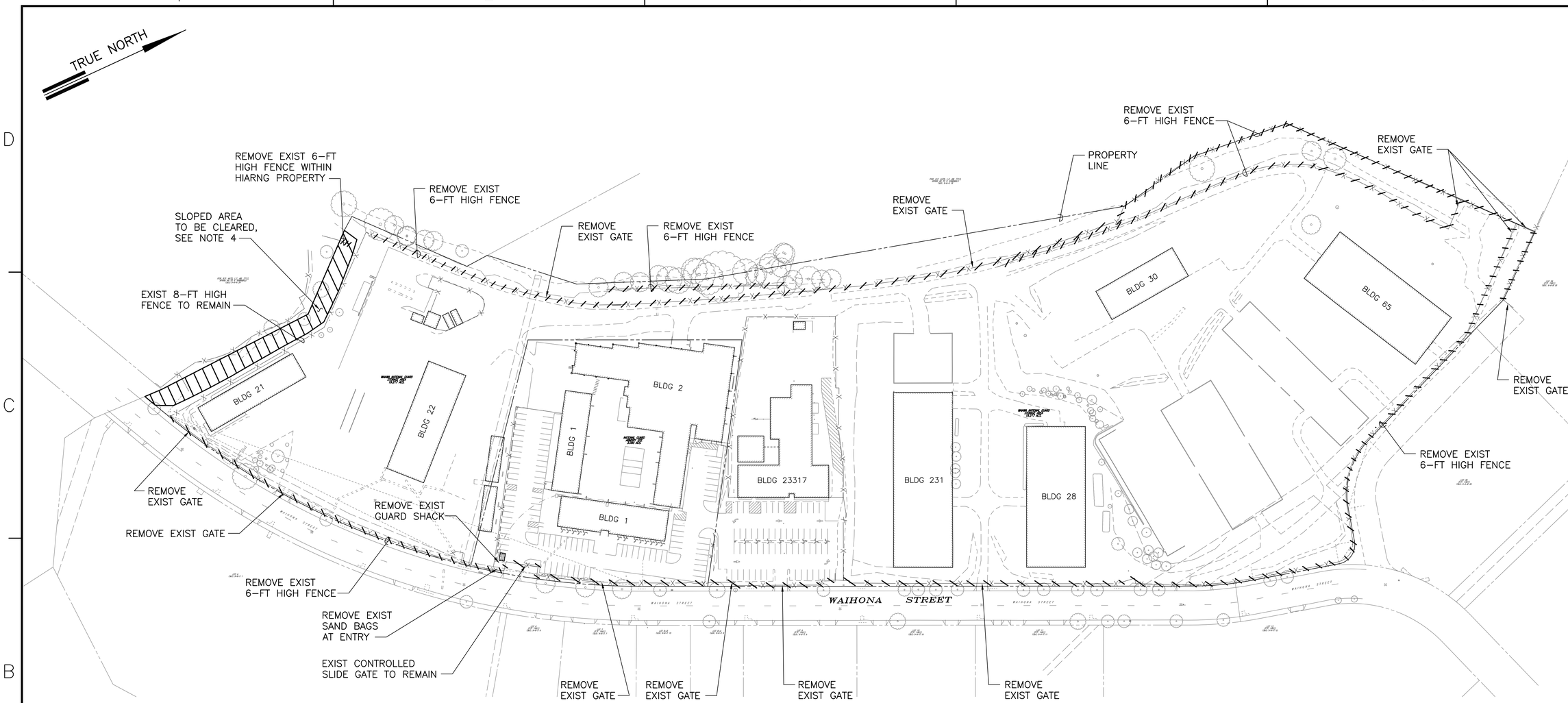

DEMOLITION PLAN

SCALE: 1" = 80'

NOTES:

1. THE CONTRACTOR SHALL PROVIDE SECURE PERIMETER TEMPORARY FENCING IS REQUIRED IF THE PROPOSED FENCING IS NOT PROVIDED PRIOR TO DEMOLITION OF EXISTING FENCING.
2. REMOVE AND DISPOSE EXISTING "NO TRESPASSING' AND 'WARNING RESTRICTED AREA' SIGNS ON EXISTING FENCING.
3. REMOVE AND SALVAGE OTHER EXISTING SIGNS POSTED ON EXISTING FENCES AND GATES. SALVAGED SIGNS TO BE REINSTALLED ON NEW FENCE IN SAME GENERAL LOCATION.
4. FOR CLEARING OF SLOPE, SEE SLOPE CLEARING NOTES ON SHEET G-04.

GRAPHIC SCALE:

80' 40' 0 80' 160'

SCALE: 1" = 80'

HAWAII ARMY NATIONAL GUARD

HDR

A/E INFO

TONY C.G. LAU
LICENSED PROFESSIONAL ENGINEER
No. 9021-C
HAWAII, U.S.A.

SEAL

SYM	DESCRIPTION	DATE	APPR

SUBMITTAL PHASE: FINAL

SUBMITTAL DATE: 03/02/15

DES: ET DRW: BTY CHK: RA

DEPARTMENT OF DEFENSE
DESIGN AND PROJECT MANAGEMENT BRANCH

HONOLULU, HAWAII

STATE OF HAWAII
FACILITY MANAGEMENT OFFICE

HAWAII ARMY NATIONAL GUARD
PHYSICAL SECURITY AND IMPROVEMENTS

HIARNG

WAIAWA
PERIMETER FENCE

DEMOLITION PLAN

SCALE: AS NOTED

STATE JOB NO. CA-1328-D

FEDERAL PROJECT NO. 15140023

SHEET 9 OF 25

C-01

DATE: 08/28/14
SCALE: 1 = 1
FILE: 2013033-112
PM: TCL
OPER: *FI
DATE REV. 02/16/15

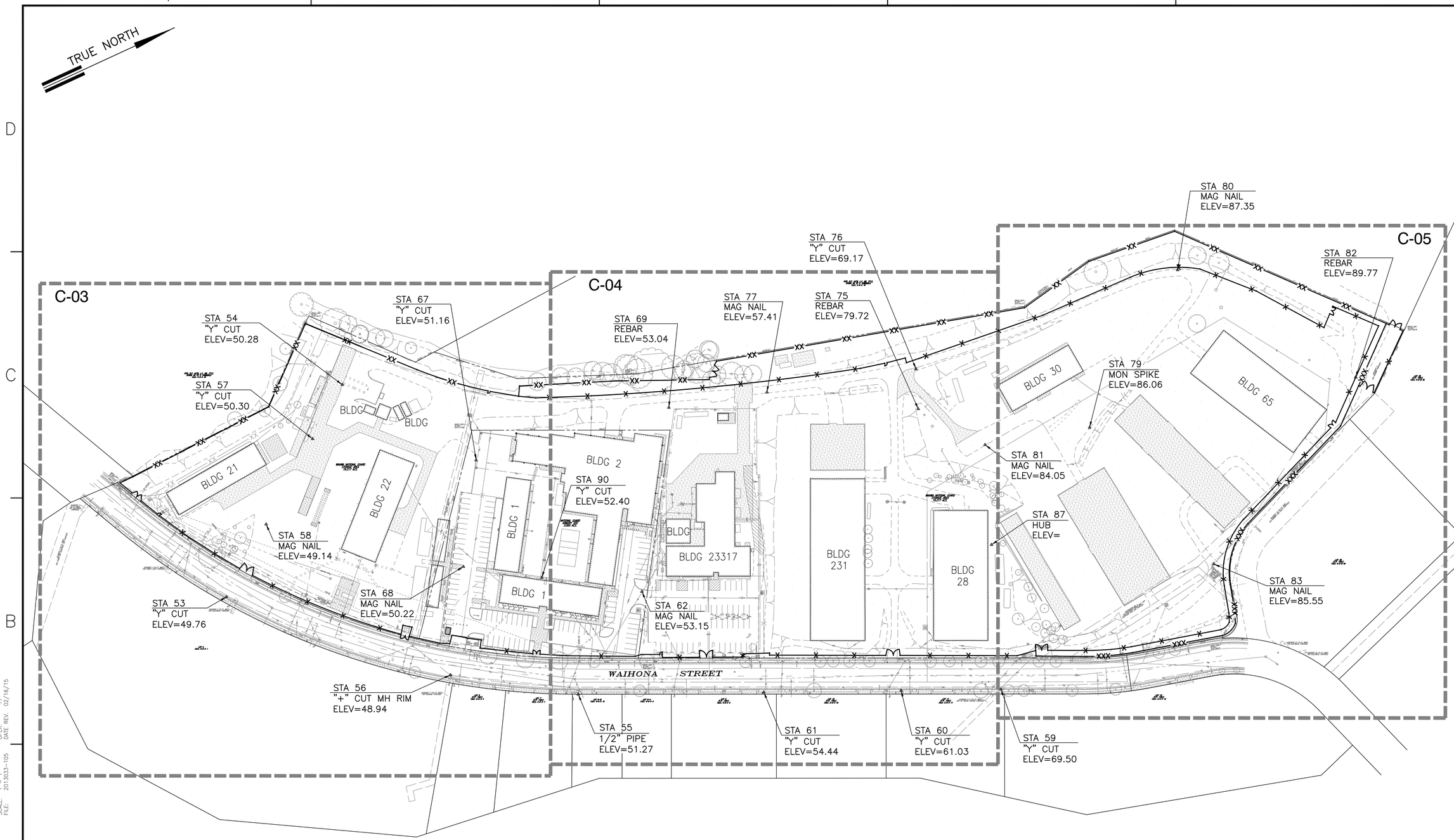

GENERAL CIVIL KEY PLAN

SCALE: 1" = 80'

LEGEND:

40' SCALE SHEET LOCATION

GRAPHIC SCALE:

80' 40' 0 80' 160'

SCALE: 1" = 80'

HAWAII ARMY NATIONAL GUARD

HDR

A/E INFO

TONY C.G. LAU
LICENSED PROFESSIONAL ENGINEER
No. 9021-C
HAWAII, U.S.A.

SEAL

SYM	DESCRIPTION	DATE	APPR

SUBMITTAL PHASE: FINAL

SUBMITTAL DATE: 03/02/15

DES: ET DRW: BTY CHK: RA

DEPARTMENT OF DEFENSE
DESIGN AND PROJECT MANAGEMENT BRANCH

HAWAII ARMY NATIONAL GUARD
PHYSICAL SECURITY AND IMPROVEMENTS

HONOLULU, HAWAII

STATE OF HAWAII
FACILITY MANAGEMENT OFFICE

HIARNG

WAIAWA
PERIMETER FENCE

GENERAL CIVIL KEY PLAN

SCALE: AS NOTED

STATE JOB NO. CA-1328-D

FEDERAL PROJECT NO. 15140023

SHEET 10 OF 25

C-02

DATE: 08/28/14 PM: TCL
SCALE: 1 = 1 OPER: *FI
FILE: 2013033-105 DATE REV. 02/16/15

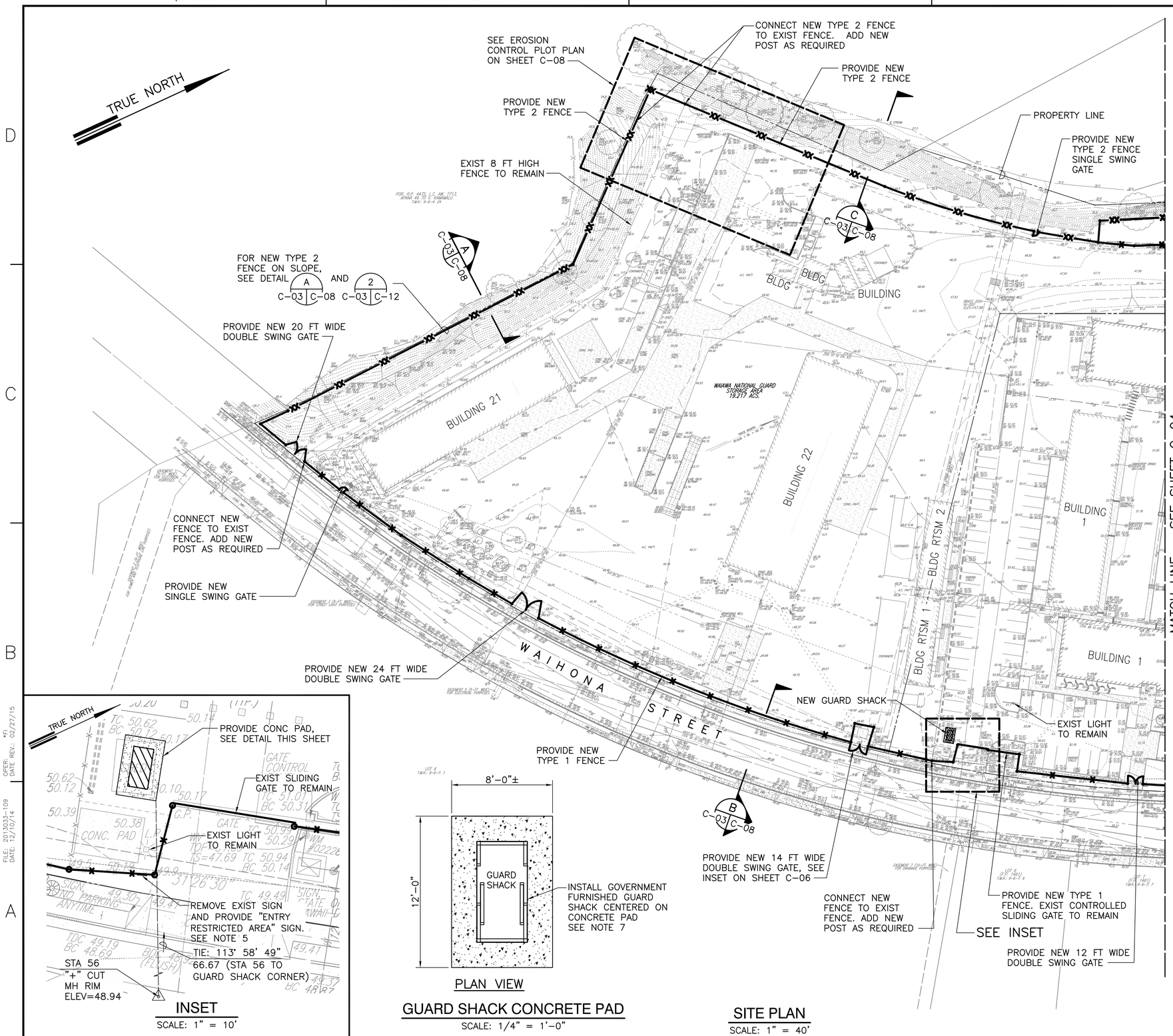

INSET

SCALE: 1" = 10'

PLAN VIEW

GUARD SHACK CONCRETE PAD

SCALE: 1/4" = 1'-0"

SITE PLAN

SCALE: 1" = 40'

NOTES:

1. FOR TYPE 1 AND 2 FENCE, SEE DETAIL 1 C-03 C-09
2. FOR SINGLE SWING GATE, SEE DETAIL 3 C-03 C-11
3. FOR DOUBLE SWING GATE, SEE DETAIL 1 C-03 C-11
4. PROVIDE "RESTRICTED AREA" SIGN ON OUTER MOST CHAIN LINK FENCE FABRIC EVERY 100 FT, SEE DETAIL 4 C-03 C-10 AND 5 C-03 C-10
5. PROVIDE "ENTRY RESTRICTED AREA" SIGN AT MAIN ENTRY AND ON FENCE SEGEMENT ADJACENT TO GATES ON OUTER MOST CHAIN LINK FENCE FABRIC, SEE DETAIL 6 C-03 C-10
6. REMOVE AND SALVAGE EXISTING SIGNS POSTED ON EXISTING FENCES AND GATES. SALVAGED SIGNS TO BE REINSTALLED ON NEW FENCE IN SAME GENERAL LOCATION.
7. FOR GUARD SHACK CONCRETE PAD, SEE DETAIL 3 C-03 C-10
8. FOR FENCE AND GATE ALIGNMENT, SEE SHEETS C-06 AND C-07 FOR FENCE PLOT PLAN.
9. FOR ELECTRICAL AND COMMUNICATION DUCTLINES, SEE SHEET E-02.

LEGEND:

TYPE 1 FENCE

TYPE 2 FENCE

GRAPHIC SCALES:

4' 2' 0 4' 8'
SCALE: 1/4" = 1'-0"

10' 5' 0 10' 20'
SCALE: 1" = 10'

40' 20' 0 40' 80'
SCALE: 1" = 40'

HAWAII ARMY NATIONAL GUARD

HDR

A/E INFO

TONY C.G. LAU LICENSED PROFESSIONAL ENGINEER No. 9021-C HAWAII, U.S.A.

SEAL

SYM	DESCRIPTION	DATE	APPR

SUBMITTAL PHASE: FINAL

SUBMITTAL DATE: 03/02/15

DES: ET DRW: BTY CHK: RA

DEPARTMENT OF DEFENSE
DESIGN AND PROJECT MANAGEMENT BRANCH

HONOLULU, HAWAII

HAWAII ARMY NATIONAL GUARD
PHYSICAL SECURITY AND IMPROVEMENTS

WAIAWA PERIMETER FENCE

SITE PLAN, SHEET 1

STATE OF HAWAII
FACILITY MANAGEMENT OFFICE
HIARNG

SCALE: AS NOTED

STATE JOB NO. CA-1328-D

FEDERAL PROJECT NO. 15140023

SHEET 11 OF 25

C-03

OPER: *FI
DATE: REV: 02/27/15

FILE: 2013033-109
DATE: 12/10/14

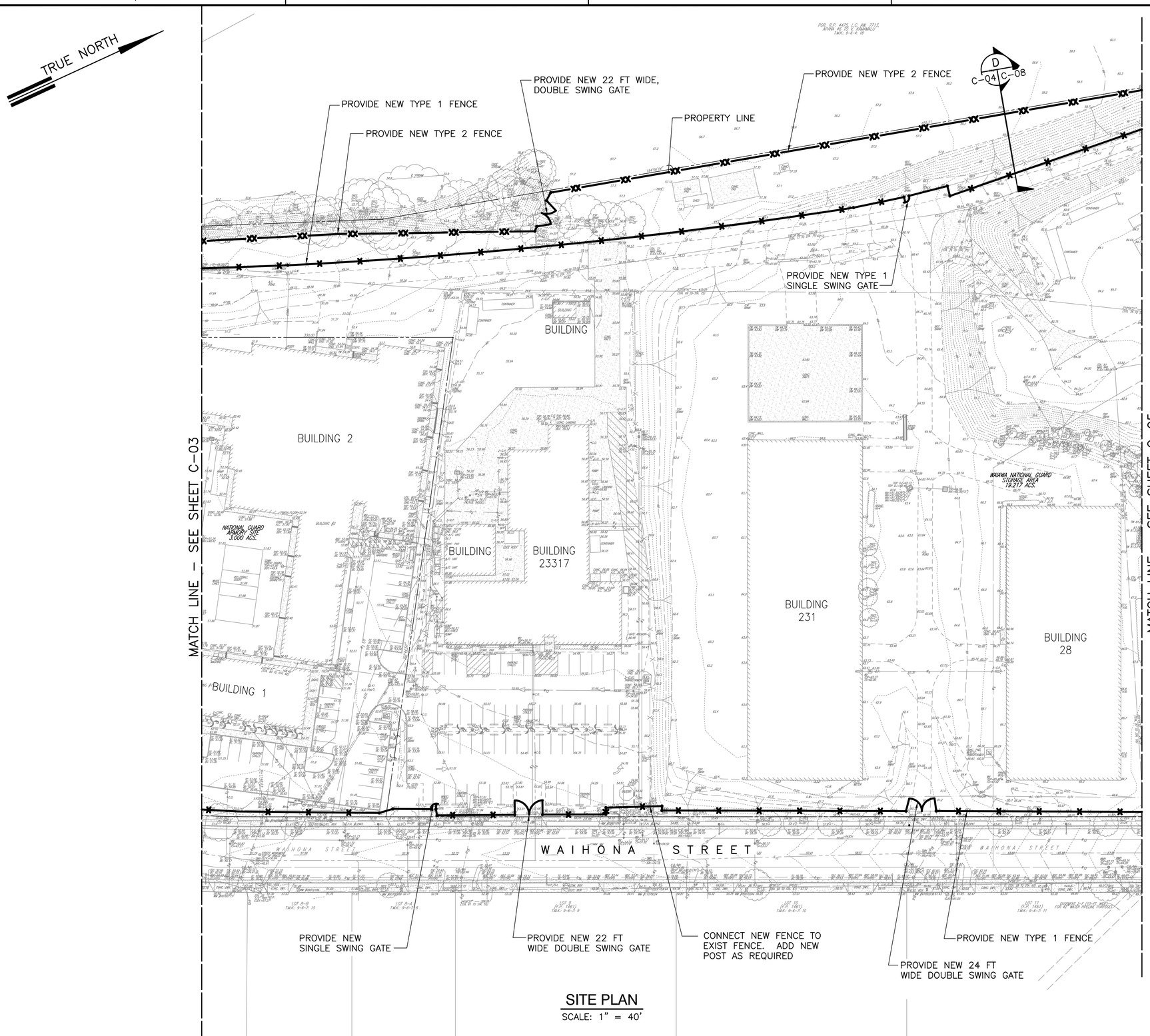

SITE PLAN

SCALE: 1" = 40'

NOTES:

1. FOR TYPE 1 AND 2 FENCE, SEE DETAIL 1 / C-04 C-09
2. FOR SINGLE SWING GATE, SEE DETAIL 3 / C-04 C-11
3. FOR DOUBLE SWING GATE, SEE DETAIL 1 / C-04 C-11
4. PROVIDE "RESTRICTED AREA" SIGN ON OUTER MOST CHAIN LINK FENCE FABRIC EVERY 100 FT, SEE DETAIL 4 / C-04 C-10 AND 5 / C-04 C-10
5. REMOVE AND SALVAGE OTHER EXISTING SIGNS POSTED ON EXISTING FENCES AND GATES. SALVAGED SIGNS TO BE REINSTALLED ON NEW FENCE IN SAME GENERAL LOCATION.
6. FOR ELECTRICAL AND COMMUNICATION DUCTLINES, SEE SHEET E-02.

LEGEND:

TYPE 1 FENCE

TYPE 2 FENCE

GRAPHIC SCALE:

40' 20' 0 40' 80'

SCALE: 1" = 40'

HAWAII ARMY NATIONAL GUARD

HDR

A/E INFO

TONY C.G. LAU
LICENSED PROFESSIONAL ENGINEER
No. 9021-C
HAWAII, U.S.A.

SEAL

SYM	DESCRIPTION	DATE	APPR

SUBMITTAL PHASE: FINAL

SUBMITTAL DATE: 03/02/15

DES ET | DRW BTY | CHK RA

DEPARTMENT OF DEFENSE
DESIGN AND PROJECT MANAGEMENT BRANCH

STATE OF HAWAII
FACILITY MANAGEMENT OFFICE

HAWAII ARMY NATIONAL GUARD
PHYSICAL SECURITY AND IMPROVEMENTS

HONOLULU, HAWAII

HIARNG

WAIAWA PERIMETER FENCE

SITE PLAN, SHEET 2

SCALE: AS NOTED

STATE JOB NO. CA-1328-D

FEDERAL PROJECT NO. 15140023

SHEET 12 OF 25

C-04

FILE: 2013033-110
DATE: 01/03/14

OPPR: *FI
DATE: REV.: 02/27/15

SITE PLAN

SCALE: 1" = 40'

NOTES:

1. FOR TYPE 1 AND 2 FENCE, SEE DETAIL 1 / C-03 | C-09
2. FOR SINGLE SWING GATE, SEE DETAIL 3 / C-03 | C-11
3. FOR DOUBLE SWING GATE, SEE DETAIL 1 / C-03 | C-11
4. PROVIDE "RESTRICTED AREA" SIGN ON OUTER MOST CHAIN LINK FENCE FABRIC EVERY 100 FT, SEE DETAIL 4 / C-05 | C-10 AND 5 / C-05 | C-10
5. REMOVE AND SALVAGE OTHER EXISTING SIGNS POSTED ON EXISTING FENCES AND GATES. SALVAGED SIGNS TO BE REINSTALLED ON NEW FENCE IN SAME GENERAL LOCATION.
6. PROVIDE "NO PARKING" SIGN ON OUTSIDE FACING GATE FENCE FABRIC, SEE DETAIL 7 / C-05 | C-10
7. FOR FENCE AND GATE ALIGNMENT, SEE SHEETS C-06 AND C-07 FOR FENCE PLOT PLAN.

LEGEND:

- TYPE 1 FENCE
- TYPE 2 FENCE
- TYPE 3 FENCE

GRAPHIC SCALE:

40' 20' 0 40' 80'

SCALE: 1" = 40'

HAWAII ARMY NATIONAL GUARD

HDR

A/E INFO

TONY C.G. LAU
LICENSED PROFESSIONAL ENGINEER
No. 9021-C
HAWAII, U.S.A.

SEAL

SYM	DESCRIPTION	DATE	APPR

SUBMITTAL PHASE: FINAL

SUBMITTAL DATE: 03/02/15

DES: ET DRW: BTY CHK: RA

STATE OF HAWAII
FACILITY MANAGEMENT OFFICE
HIARNG

DEPARTMENT OF DEFENSE
DESIGN AND PROJECT MANAGEMENT BRANCH
HAWAII ARMY NATIONAL GUARD
PHYSICAL SECURITY AND IMPROVEMENTS

HONOLULU, HAWAII

WAIAWA PERIMETER FENCE

SITE PLAN, SHEET 3

SCALE: AS NOTED

STATE JOB NO. CA-1328-D

FEDERAL PROJECT NO. 15140023

SHEET 13 OF 25

C-05

FILE: 2013033-111
DATE: 10/15/14

OPER: ET
DATE REV.: 02/27/15

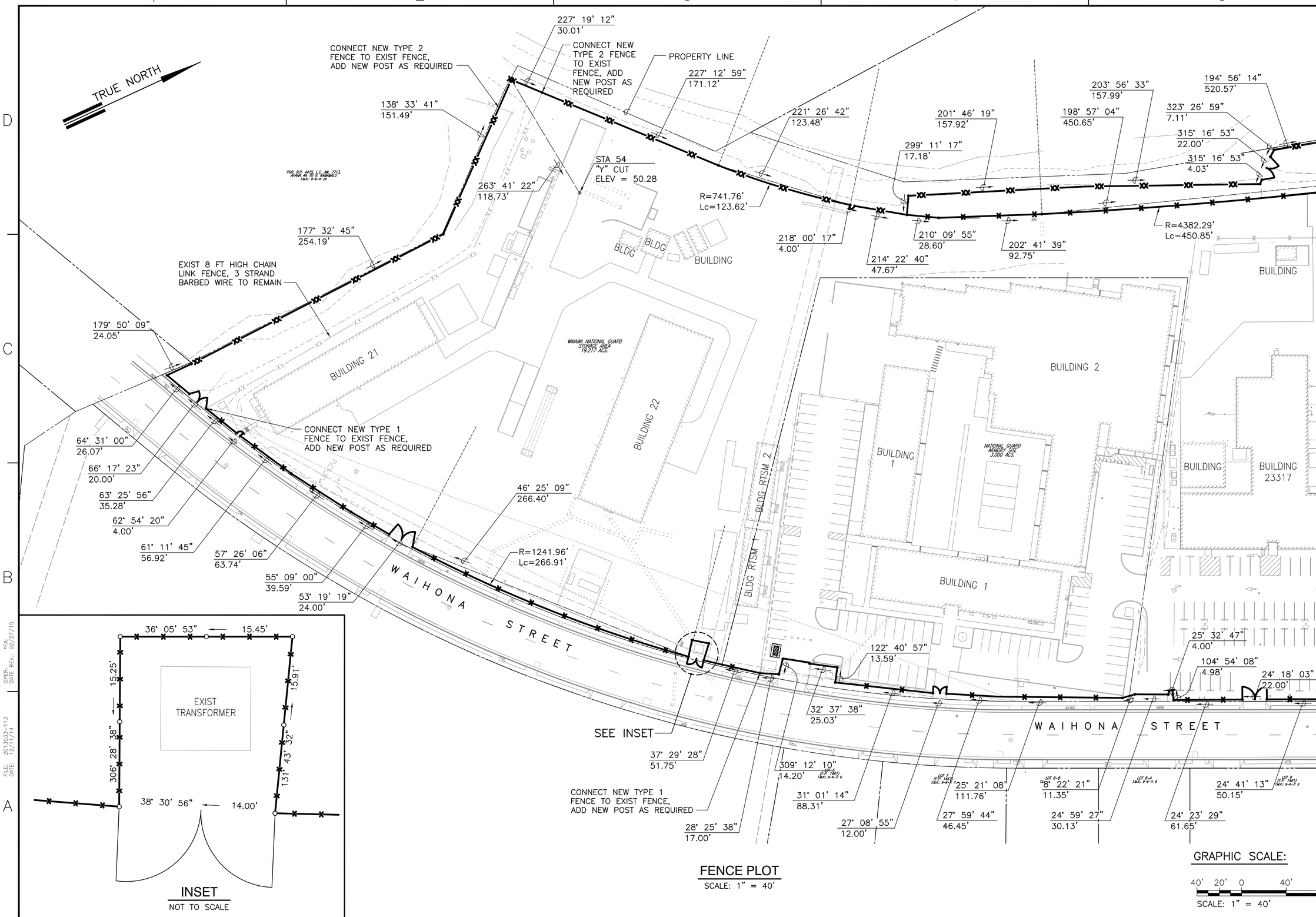

INSET
NOT TO SCALE

FENCE PLOT
SCALE: 1" = 40'

GRAPHIC SCALE:
40' 20' 0 40' 80'
SCALE: 1" = 40'

HAWAII ARMY NATIONAL GUARD

HDR

TONY C.G. LAU
LICENSED PROFESSIONAL ENGINEER
No. 9021-C
HAWAII, U.S.A.

SYM	DESCRIPTION	DATE	APPR

SUBMITTAL PHASE: FINAL
SUBMITTAL DATE: 03/02/15
DES: ET DRW: BTY CHK: RA

DEPARTMENT OF DEFENSE
DESIGN AND PROJECT MANAGEMENT BRANCH
HONOLULU, HAWAII

STATE OF HAWAII
FACILITY MANAGEMENT OFFICE
HIARNG

HAWAII ARMY NATIONAL GUARD
PHYSICAL SECURITY AND IMPROVEMENTS

WAIAWA
PERIMETER FENCE

FENCE PLOT PLAN, SHEET 1

SCALE: AS NOTED
STATE JOB NO. CA-1328-D
FEDERAL PROJECT NO. 15140023
SHEET 14 OF 25
C-06

FILE: 2013033-113
DATE: 12/11/14
OPER: *FAI
DATE REV.: 02/27/15

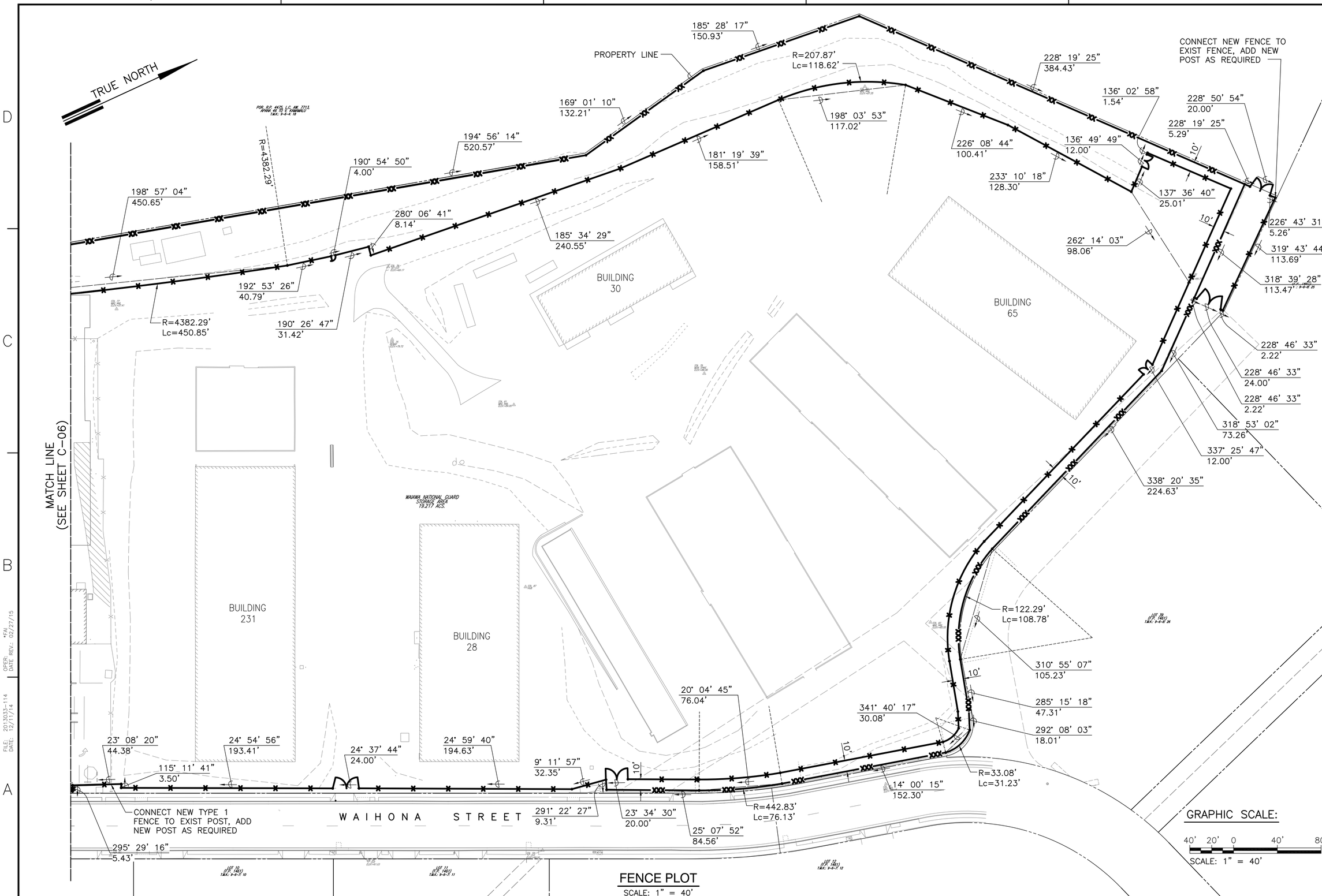

FENCE PLOT
SCALE: 1" = 40'

HAWAII ARMY NATIONAL GUARD

HDR

A/E INFO

TONY C.G. LAU
LICENSED PROFESSIONAL ENGINEER
No. 9021-C
HAWAII, U.S.A.

SEAL

SYM	DESCRIPTION	DATE	APPR

SUBMITTAL PHASE: FINAL
SUBMITTAL DATE: 03/02/15
DES: ET DRW: BTY CHK: RA

DEPARTMENT OF DEFENSE
DESIGN AND PROJECT MANAGEMENT BRANCH
HONOLULU, HAWAII

HAWAII ARMY NATIONAL GUARD
PHYSICAL SECURITY AND IMPROVEMENTS

STATE OF HAWAII
FACILITY MANAGEMENT OFFICE
HIARNG

WAIAWA
PERIMETER FENCE
FENCE PLOT PLAN, SHEET 2

SCALE: AS NOTED
STATE JOB NO. CA-1328-D
FEDERAL PROJECT NO. 15140023
SHEET 15 OF 25
C-07

FILE: 2013033-114 DATE: 12/11/14
OPER: *FAI DATE REV.: 02/27/15

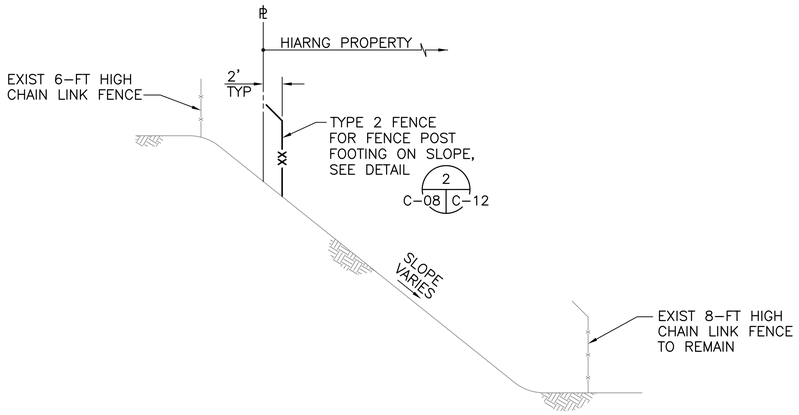

SECTION A
NOT TO SCALE C-03 C-08

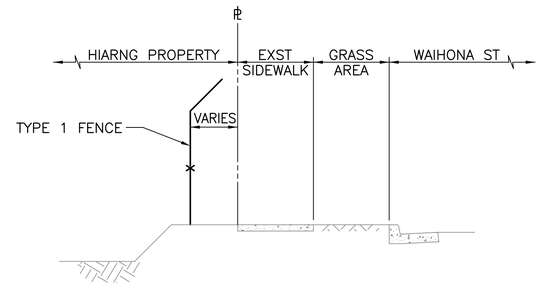

SECTION B
NOT TO SCALE C-03 C-08

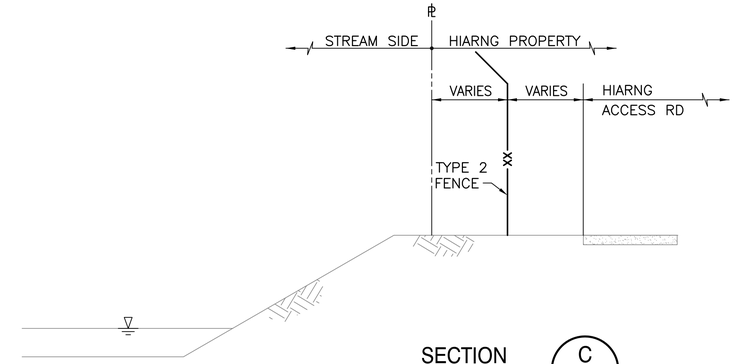

SECTION C
NOT TO SCALE C-03 C-08

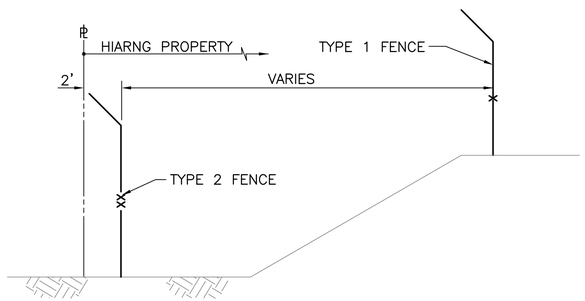

SECTION D
NOT TO SCALE C-04 C-08

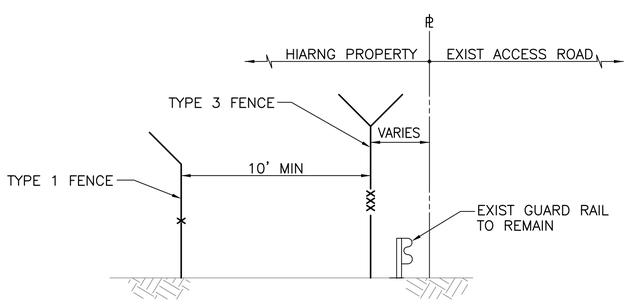

SECTION E
NOT TO SCALE C-05 C-08

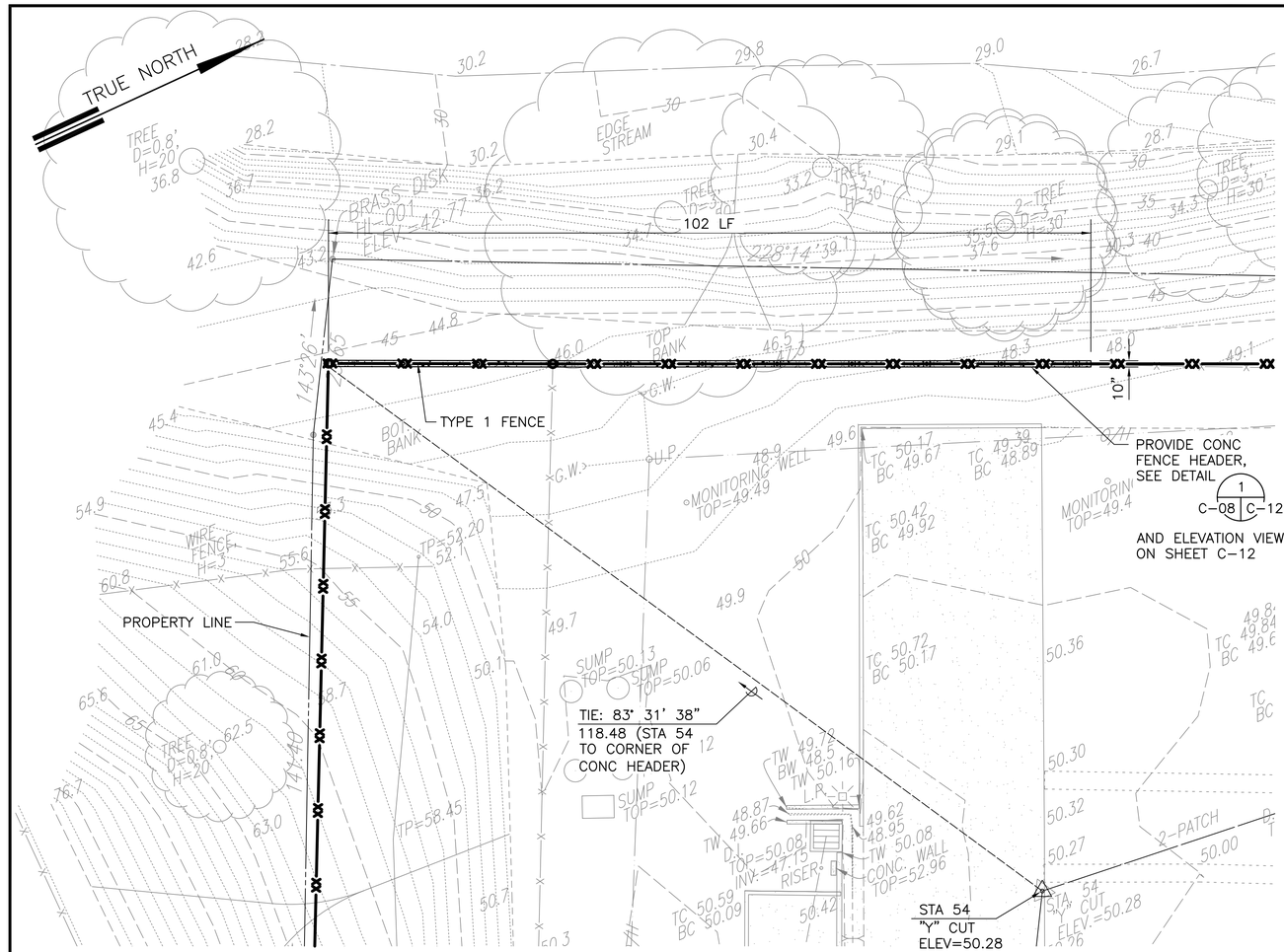

EROSION CONTROL PLOT PLAN
SCALE: 1" = 10'-0"

GRAPHIC SCALE:
10' 5' 0 10' 20'
SCALE: 1" = 10'

HAWAII ARMY NATIONAL GUARD

HDR

A/E INFO

TONY C.G. LAU
LICENSED PROFESSIONAL ENGINEER
No. 9021-C
HAWAII, U.S.A.

SEAL

SYM	DESCRIPTION	DATE	APPR

SUBMITTAL PHASE: FINAL
SUBMITTAL DATE: 03/02/15
DES ET | DRW BTY | CHK RA

DEPARTMENT OF DEFENSE
DESIGN AND PROJECT MANAGEMENT BRANCH
HONOLULU, HAWAII

STATE OF HAWAII
FACILITY MANAGEMENT OFFICE
HIARNG

HAWAII ARMY NATIONAL GUARD
PHYSICAL SECURITY AND IMPROVEMENTS

WAIAWA
PERIMETER FENCE

TYPICAL FENCE LAYOUT, SECTIONS, EROSION CONTROL PLOT PLAN

SCALE: AS NOTED
STATE JOB NO. CA-1328-D
FEDERAL PROJECT NO. 15140023
SHEET 16 OF 25
C-08

FILE: 2013033-115
DATE: -
OPER: *FI
DATE REV.: 02/27/15

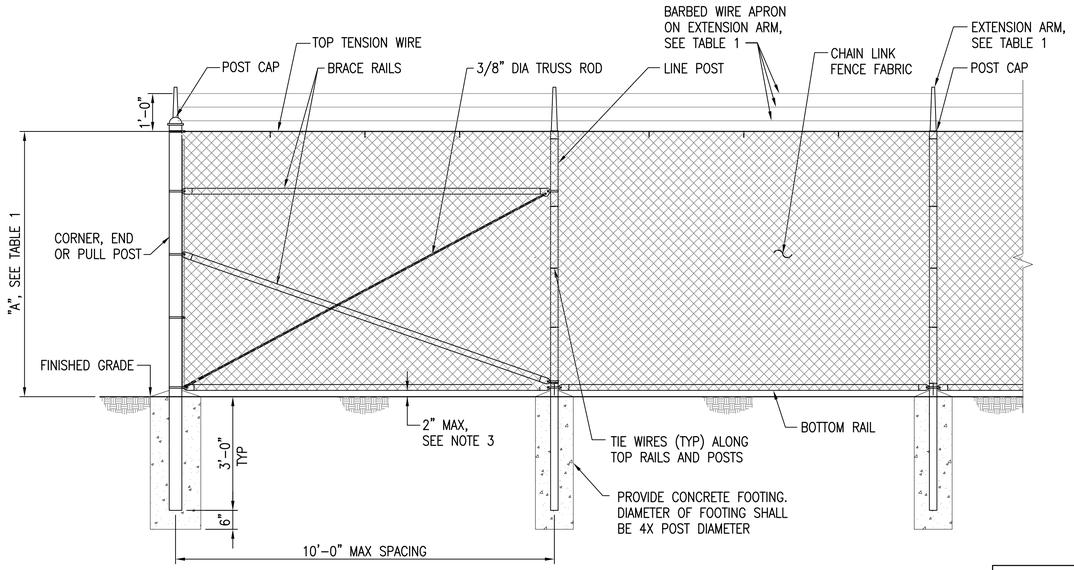

NOTES:

1. FOR SINGLE EXTENSION ARM, SEE DETAIL 1 / C-09 C-10
2. FOR DOUBLE EXTENSION ARM, SEE DETAIL 2 / C-09 C-10
3. FOR AREAS WITH SOIL EROSION, FINISHED GRADE TO BOTTOM OF FENCE SHALL BE NO MROE THAN 1 1/2 INCHES.
4. PROVIDE BRACING FOR EACH END AND CORNER POST
5. EXTENSION ARMS SHALL BE PERMANENTLY AFFIXED TO TOP FENCE POSTS TO INCREASE THE OVERALL HEIGHT OF THE FENCE BY AT LEAST 1 FT.

TABLE 1			
FENCE TYPE	"A"	EXTENSION ARM TYPE	NO. STRANDS OF BARBED WIRE
1	6'-0"	SINGLE	3
2	7'-0"	SINGLE	3
3	7'-0"	DOUBLE	6

CHAIN LINK FENCE - TYPE 1, 2 AND 3 (1 / VAR C-09)

SCALE: 1/2"= 1'-0"

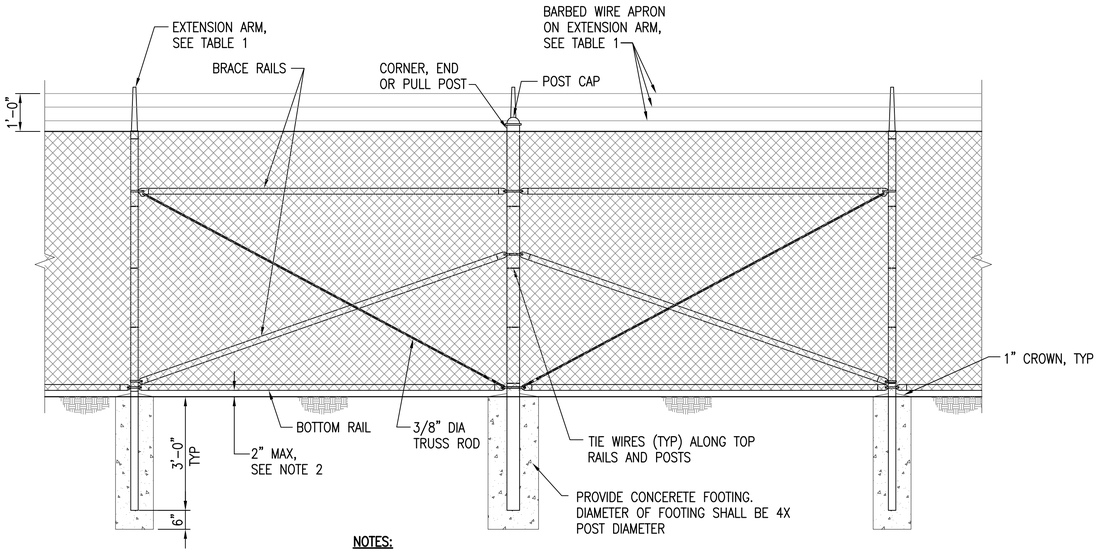

NOTES:

1. PROVIDE BRACING FOR EACH END AND CORNER POST.
2. FOR AREAS WITH SOIL EROSION, FINISHED GRADE TO BOTTOM OF FENCE SHALL BE NO MORE THAN 1 1/2 INCHES.

BRACED PANEL (2 / C-09 C-09)

SCALE: 1/2"= 1'-0"

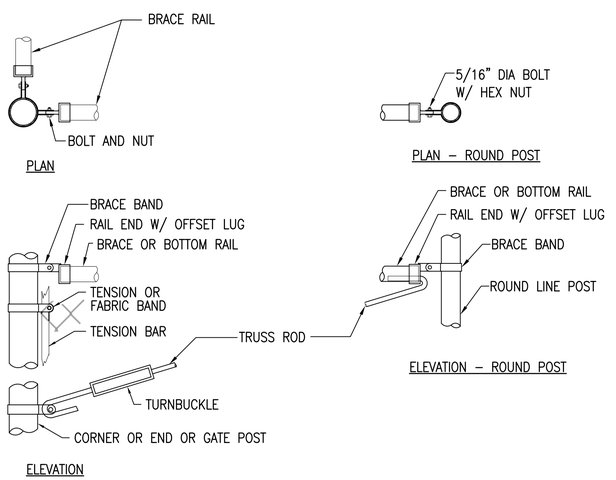

CORNER OR END POST (3 / C-09 C-09)

SCALE: 1 1/2"= 1'-0"

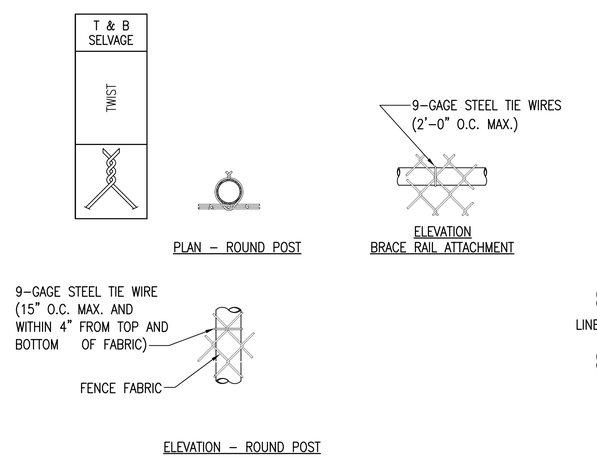

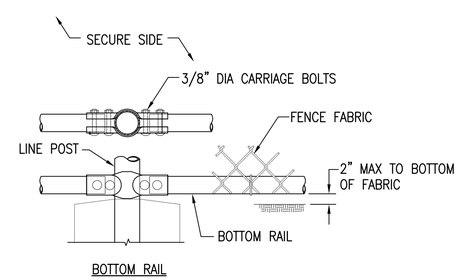

LINE POST (4 / C-09 C-09)

SCALE: 1 1/2"= 1'-0"

GRAPHIC SCALES:

2' 0 2' 4'
SCALE: 1/2" = 1'-0"

6" 0 6" 1' 1'-6"
SCALE: 1-1/2" = 1'-0"

SYM	DESCRIPTION
DATE	APPR

SUBMITTAL PHASE: FINAL
SUBMITTAL DATE: 03/02/15
DES: ET | DRW: BTY | CHK: RA

STATE OF HAWAII
FACILITY MANAGEMENT OFFICE
HIARNG

DEPARTMENT OF DEFENSE
DESIGN AND PROJECT MANAGEMENT BRANCH
HONOLULU, HAWAII

HAWAII ARMY NATIONAL GUARD
PHYSICAL SECURITY AND IMPROVEMENTS

WAIAWA PERIMETER FENCE

CIVIL DETAILS, SHEET 1

SCALE: AS NOTED
STATE JOB NO. CA-1328-D
FEDERAL PROJECT NO. 15140023
SHEET 17 OF 25
C-09

A/E INFO

LICENSED PROFESSIONAL ENGINEER No. 9021-C TONY C.G. LAU HAWAII, U.S.A.

FILE: 2013033-116
DATE: 02/27/15
ORIGIN DATE REV.: *T1

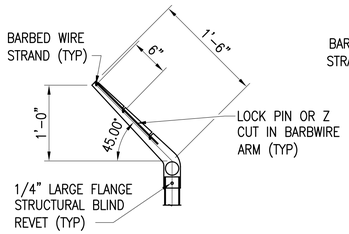

LINE POST

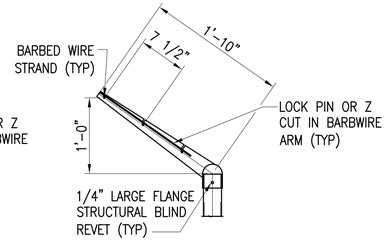

CORNER POST

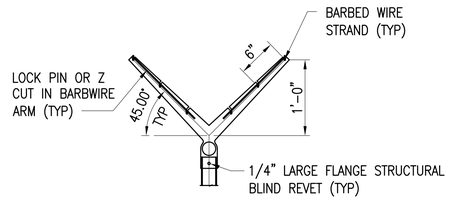

LINE POST

SINGLE EXTENSION ARM (1 / C-09 | C-10)

SCALE: 1"= 1'-0"

DOUBLE EXTENSION ARM (2 / C-09 | C-10)

SCALE: 1"= 1'-0"

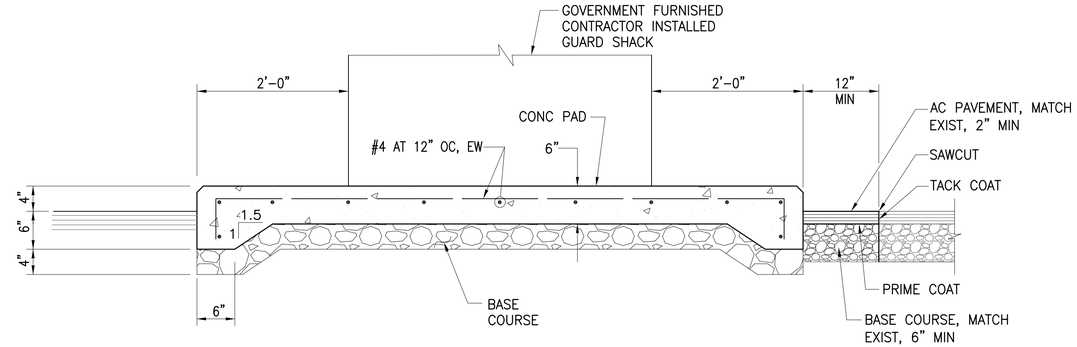

CONCRETE PAD (3 / C-09 | C-10)

SCALE: 1"= 1'-0"

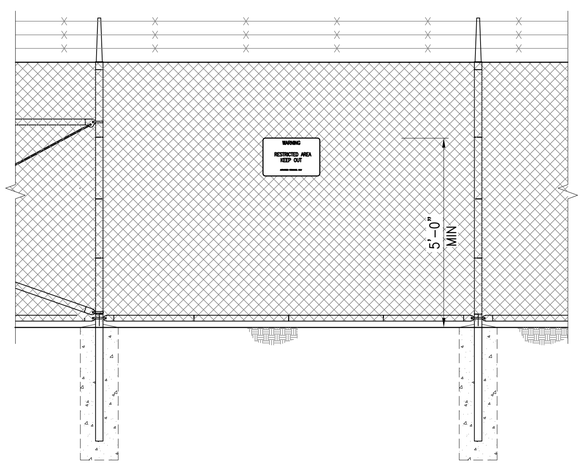

NOTES:

1. "RESTRICTED AREA" SIGN TO BE POSTED ON OUTER MOST FENCE APPROXIMATELY EVERY 100 FT CENTERED BETWEEN POSTS.
2. "RESTRICTED AREA" SIGN TO BE TO FENCE WITH STANDARD LINK CLIP MOUNTING SYSTEM.
3. "RESTRICTED AREA" SIGN TO BE POSTED ON OUTSIDE FACING FENCE.
4. FOR "RESTRICTED AREA" SIGN, SEE DETAIL 5 / C-10 | C-10

PERIMETER RESTRICTED AREA SIGN POSTING (4 / VAR | C-10)

SCALE: 1/2"= 1'-0"

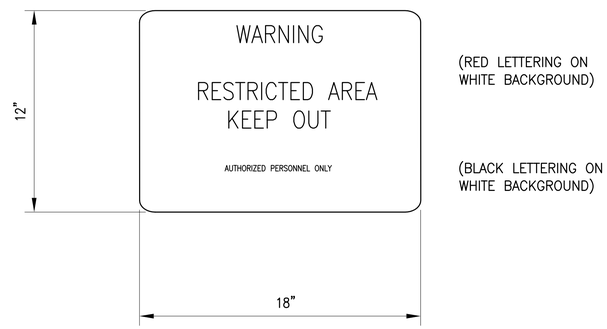

PERIMETER RESTRICTED AREA SIGN (5 / VAR | C-10)

NOT TO SCALE

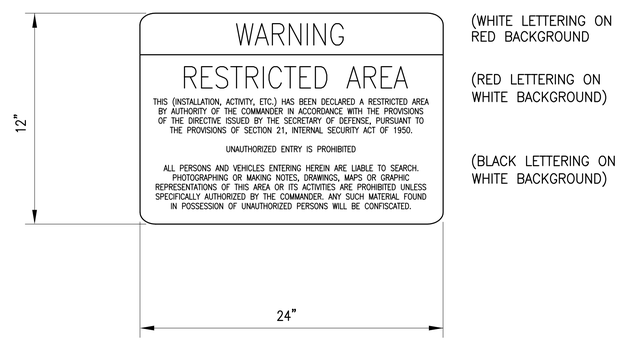

ENTRY RESTRICTED AREA SIGN (6 / VAR | C-10)

NOT TO SCALE

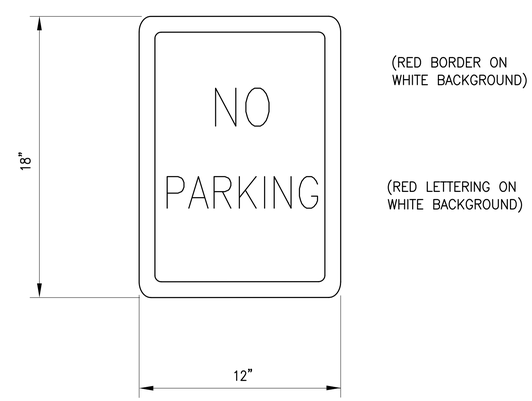

NO PARKING SIGN (7 / C-05 | C-10)

NOT TO SCALE

GRAPHIC SCALES:

2' 0 2' 4'
SCALE: 1/2" = 1'-0"

1' 0 1' 2'
SCALE: 1" = 1'-0"

HAWAII ARMY NATIONAL GUARD

HDR

A/E INFO

TONY C. G. LAU
LICENSED PROFESSIONAL ENGINEER
No. 9021-C
HAWAII, U.S.A.

SEAL

SYM	DESCRIPTION	DATE	APPR

SUBMITTAL PHASE: FINAL

SUBMITTAL DATE: 03/02/15

DES: ET | DRW: BTY | CHK: RA

DEPARTMENT OF DEFENSE
DESIGN AND PROJECT MANAGEMENT BRANCH
HONOLULU, HAWAII

HAWAII ARMY NATIONAL GUARD
PHYSICAL SECURITY AND IMPROVEMENTS

WAIAWA
PERIMETER FENCE

CIVIL DETAILS, SHEET 2

STATE OF HAWAII
FACILITY MANAGEMENT OFFICE
HIARNG

SCALE: AS NOTED

STATE JOB NO. CA-1328-D

FEDERAL PROJECT NO. 15140023

SHEET 18 OF 25

C-10

FILE: 2013033-117
DATE: _
OPER: *FI
DATE REV.: 02/27/15

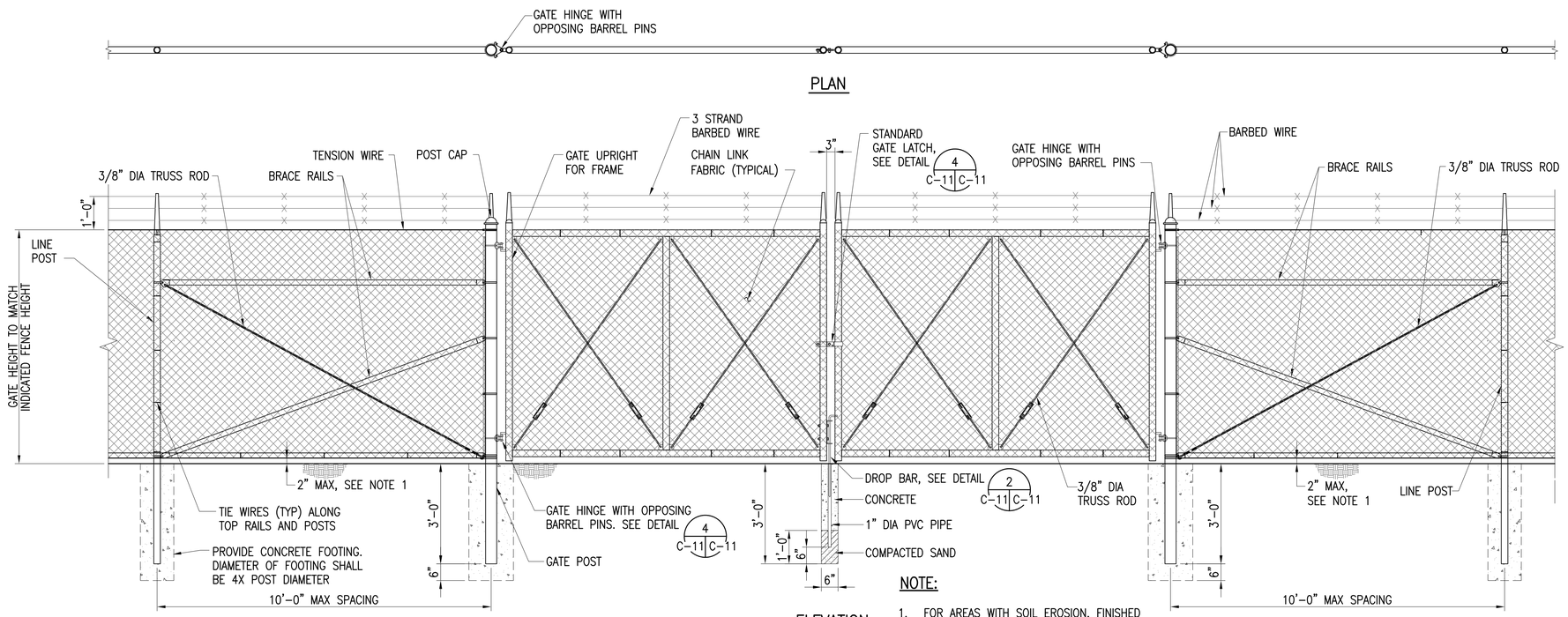

NOTE:

1. FOR AREAS WITH SOIL EROSION, FINISHED GRADE TO BOTTOM OF FENCE SHALL BE NO MORE THAN 1 1/2".

DOUBLE SWING GATE 1 VAR C-11

SCALE: 1/2"= 1'-0"

DROP BAR NOTE:

PROVIDE ONE DROP BAR FOR EACH LEAF (TYP). ASSOCIATED GALV SLEEVES TO BE INSTALLED FLUSH WILL GRADE AT FULLY OPEN AND CLOSED POSITIONS. CONTRACTOR SHALL PROVIDE 6" LAYER OF #10 STONE BELOW BOTTOM OF SLEEVE TO ALLOW FOR DRAINAGE.

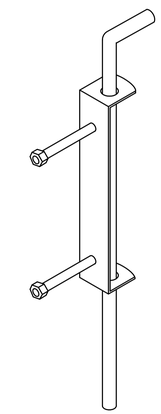

DROP BAR 2 C-11 C-11

SCALE: 1"= 1'-0"

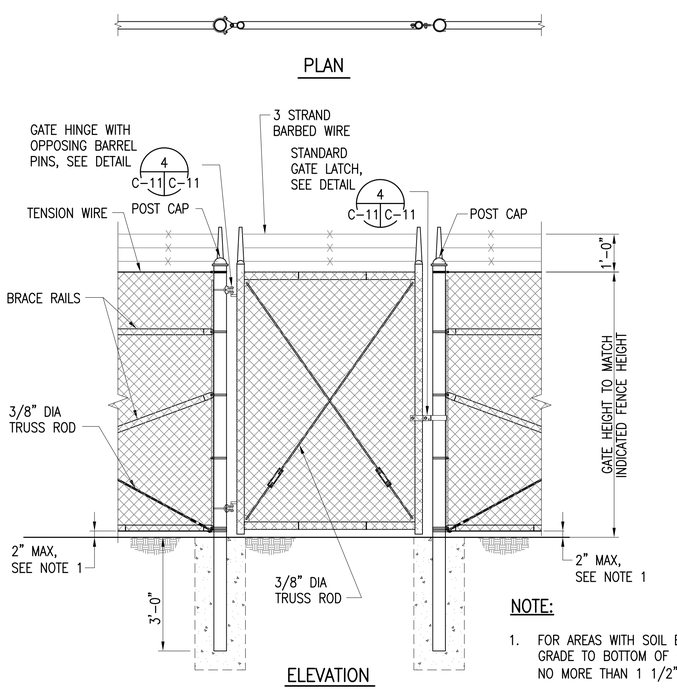

NOTE:

1. FOR AREAS WITH SOIL EROSION, FINISHED GRADE TO BOTTOM OF FENCE SHALL BE NO MORE THAN 1 1/2".

SINGLE SWING GATE 3 VAR C-11

SCALE: 1/2"= 1'-0"

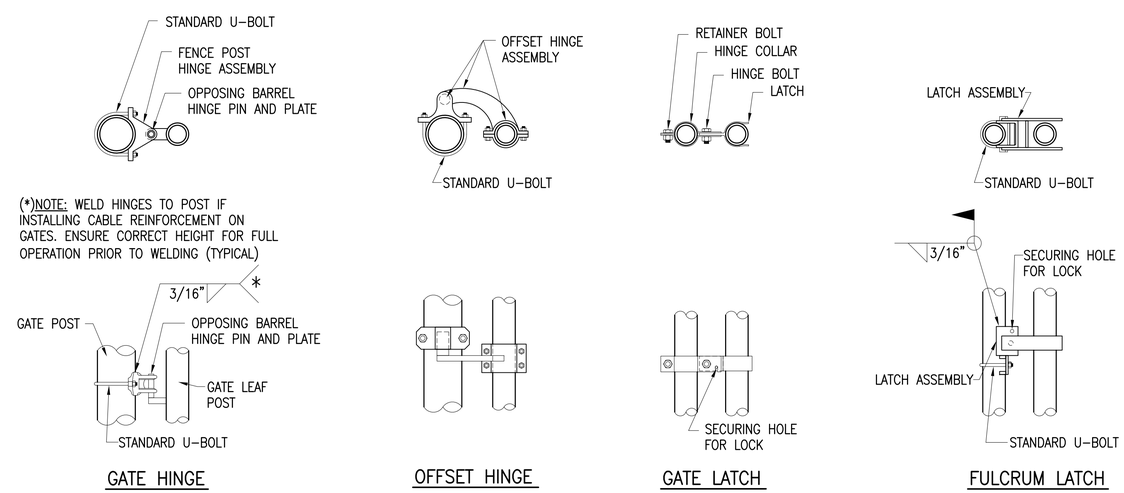

SWING GATE DETAILS 4 C-11 C-11

SCALE: 1-1/2"= 1'-0"

GRAPHIC SCALES:

2' 0 2' 4'

SCALE: 1/2" = 1'-0"

6" 0 6" 1' 1'-6"

SCALE: 1-1/2" = 1'-0"

HAWAII ARMY NATIONAL GUARD

HDR

A/E INFO

TONY C.G. LAU LICENSED PROFESSIONAL ENGINEER No. 9021-C HAWAII, U.S.A.

SEAL

SYM	DESCRIPTION	DATE	APPR

SUBMITTAL PHASE: FINAL

SUBMITTAL DATE: 03/02/15

DES: ET DRW: BTY CHK: RA

DEPARTMENT OF DEFENSE
DESIGN AND PROJECT MANAGEMENT BRANCH

HONOLULU, HAWAII

STATE OF HAWAII
FACILITY MANAGEMENT OFFICE

HAWAII ARMY NATIONAL GUARD
PHYSICAL SECURITY AND IMPROVEMENTS

HIARNG

WAIAWA
PERIMETER FENCE

CIVIL DETAILS, SHEET 3

SCALE: AS NOTED

STATE JOB NO. CA-1328-D

FEDERAL PROJECT NO. 15140023

SHEET 19 OF 25

C-11

FILE: 2013033-118 DATE: - OPER: *FI DATE REV.: 02/27/15

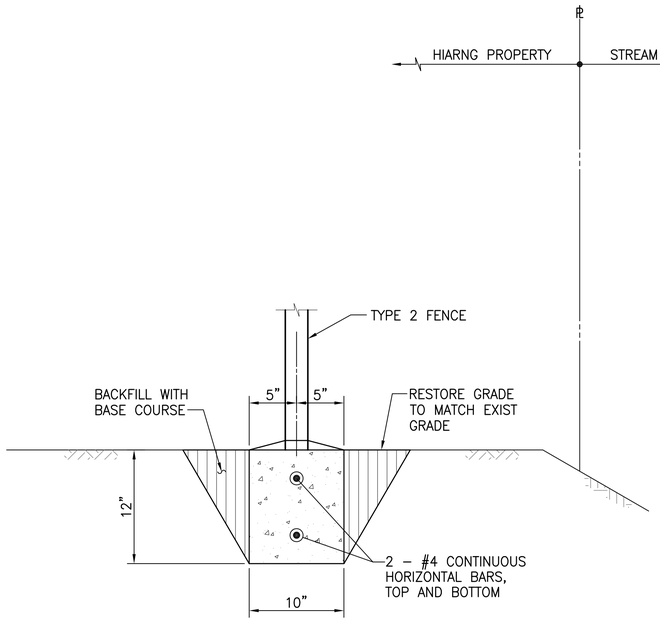

SIDE ELEVATION VIEW

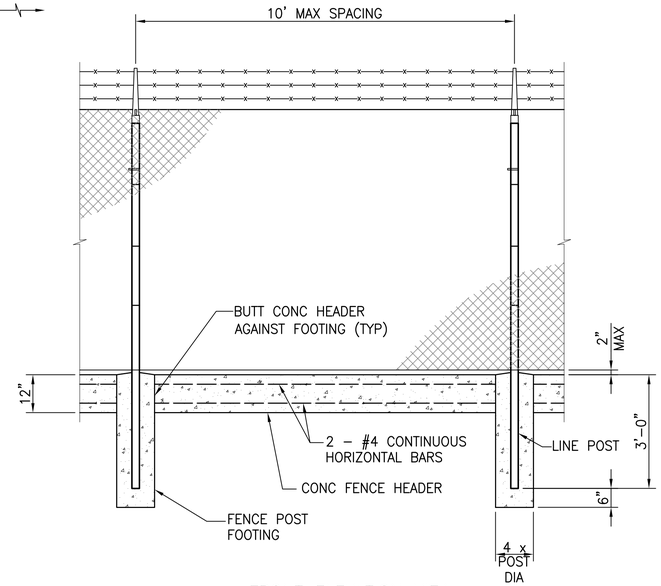

FRONT ELEVATION VIEW

CONCRETE FENCE HEADER (1 / C-08 | C-12)

NOT TO SCALE

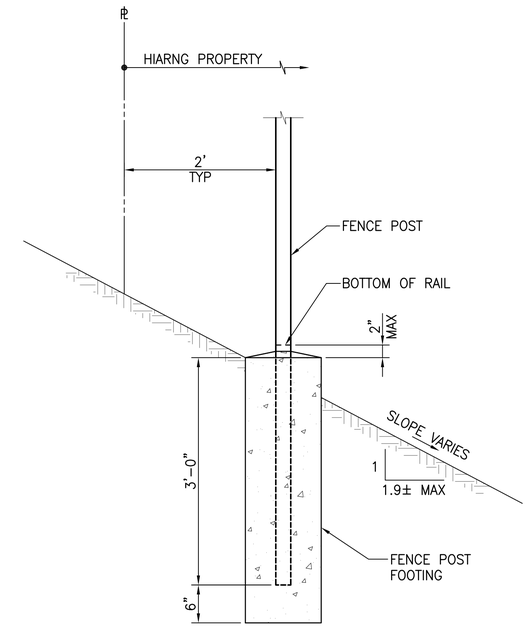

TYPICAL FENCE POST FOOTING ON SOUTH SLOPE (2 / VAR | C-12)

NOT TO SCALE

HAWAII ARMY NATIONAL GUARD

HDR

A/E INFO

TONY C. G. LAU
LICENSED PROFESSIONAL ENGINEER
No. 9021-C
HAWAII, U.S.A.

SEAL

SYM	DESCRIPTION	DATE	APPR

SUBMITTAL PHASE: FINAL

SUBMITTAL DATE: 03/02/15

DES: ET | DRW: BTY | CHK: RA

STATE OF HAWAII
FACILITY MANAGEMENT OFFICE

DEPARTMENT OF DEFENSE
DESIGN AND PROJECT MANAGEMENT BRANCH

HAWAII ARMY NATIONAL GUARD
PHYSICAL SECURITY AND IMPROVEMENTS

HIARNG

HONOLULU, HAWAII

WAIAWA
PERIMETER FENCE

CIVIL DETAILS, SHEET 4

SCALE: AS NOTED

STATE JOB NO. CA-1328-D

FEDERAL PROJECT NO. 15140023

SHEET 20 OF 25

C-12

FILE: 2013033-119
DATE: –

OPER: *FI
DATE REV.: 02/27/15

GENERAL NOTES

1. THE DRAWINGS DO NOT REFLECT ALL THE EXISTING CONDITIONS THAT MAY BE ENCOUNTERED DURING CONSTRUCTION. VISIT THE PROJECT SITE AND BECOME FAMILIAR WITH THE EXISTING CONDITIONS, THE EXTENT OF ANY DEMOLITION WORK, AND THE NEW WORK PRIOR TO THE START OF ON–SITE CONSTRUCTION ACTIVITIES. REPORT ANY DISCREPANCIES AND/OR DIFFERENCES BETWEEN THE EXISTING CONDITIONS AND THE CONSTRUCTION DOCUMENTS TO THE CONTRACTING OFFICER PRIOR TO COMMENCING CONSTRUCTION. RESOLVE ALL DISCREPANCIES AND QUESTIONS PRIOR TO THE START OF WORK.

2. EXISTING DEVICE LOCATIONS, CIRCUIT ASSIGNMENTS, WIRING CONNECTIONS, AND CONDUIT RUNS INDICATED WERE DERIVED FROM AVAILABLE REFERENCE DOCUMENTS AND LIMITED FIELD INVESTIGATION. FIELD VERIFY ALL EXISTING CONDITIONS AND MAKE ANY NECESSARY ADJUSTMENTS TO SATISFY THE INTENT OF THE DRAWINGS AND SPECIFICATIONS.

3. RE–ROUTE ALL EXISTING CONDUIT, WIRING AND CABLING TO REMAIN WITHIN THE PROJECT AREA AS NECESSARY TO FACILITATE THE [REMOVAL OF EXISTING EQUIPMENT AS WELL AS THE] INSTALLATION OF ALL NEW EQUIPMENT. REMOVE AND RE–INSTALL ELECTRICAL EQUIPMENT, INCLUDING LIGHTS, TO REMAIN AS REQUIRED.

4. VERIFY ALL SYSTEM REQUIREMENTS (ELECTRICAL, MECHANICAL, FIRE ALARM, SPECIALTY SYSTEMS, ETC.) WITH THE SELECTED SYSTEM'S MANUFACTURER OR AUTHORIZED REPRESENTATIVE PRIOR TO COMMENCING WITH ANY WORK. CORRECT ALL DISCREPANCIES SO AS TO PROVIDE A COMPLETE AND OPERATIONAL SYSTEM. RECORD CHANGES ON THE AS–BUILT DRAWINGS.

5. CONCEAL ALL CONDUIT WHEREVER REASONABLE; EXPOSED CONDUITS ARE PERMITTED ONLY WHERE SPECIFICALLY SHOWN ON THE DRAWINGS. ALL EXPOSED CONDUITS IN FINISHED AREAS SHALL BE INSTALLED IN THE LEAST VISIBLE LOCATIONS. CARE SHALL BE TAKEN TO INSTALL CONDUIT IN THE MOST AESTHETICALLY PLEASING MANNER.

6. PROVIDE NYLON PULLSTRINGS IN ALL EMPTY CONDUITS UNLESS OTHERWISE INDICATED.

7. THE TELECOMMUNICATIONS RACEWAY SYSTEM INSTALLATION SHALL COMPLY WITH TIA/EIA–569–C UNLESS OTHERWISE NOTED.

8. CONDUIT BODIES (e.g. LB, LR, etc.) SHALL NOT BE PERMITTED IN THE TELECOMMUNICATIONS RACEWAY SYSTEMS UNLESS SPECIFICALLY INDICATED TO BE UTILIZED AND LISTED FOR TELECOMMUNICATIONS SYSTEM USE.

9. PROVIDE INSULATED BUSHINGS AT ALL TELECOMMUNICATIONS CONDUIT TERMINATIONS AT ALL BOXES, BACKBOARDS, AND CONDUIT STUBS.

10. ALL SURFACE MOUNTED DEVICES SHALL BE INSTALLED UTILIZING FACTORY PAINTED SURFACE MOUNTING ACCESSORIES AND MATCHING DEVICE BOXES FOR THE MOST AESTHETICALLY PLEASING INSTALLATION.

11. PAINTING OF ELECTRICAL EQUIPMENT:
    A. INTERIOR LOCATIONS – PRIME AND PAINT ALL EXPOSED CONDUITS, BOXES, FITTINGS, SUPPORT CHANNELS, MOUNTING HARDWARE AND ACCESSORIES WITH TWO FINISH COATS TO MATCH THE SURFACE ON WHICH THEY ARE MOUNTED OR TO MATCH THE FINISH OF THE ADJACENT SURFACES. EQUIPMENT SURFACES/COMPONENTS WITH A FACTORY–APPLIED PAINT FINISH NEED NOT BE PAINTED.

    B. EXTERIOR LOCATIONS – PRIME ALL EXPOSED CONDUITS, BOXES, FITTINGS, SUPPORT CHANNELS, MOUNTING HARDWARE AND ACCESSORIES WITH A 2–PART EPOXY PRIMER AND FINISH WITH 2 COATS OF AN ALIPHATIC ACRYLIC URETHANE PAINT. PAINT FINISH TO MATCH THE SURFACE ON WHICH THEY ARE MOUNTED OR TO MATCH THE FINISH OF THE ADJACENT SURFACES. STAINLESS STEEL MATERIALS NEED NOT BE PAINTED.

12. INSTALLATION OF NEW DEVICES AND CONDUITS SHALL NOT INTERFERE WITH THE OPENING OF DOORS AND/OR WINDOWS. ACCESS AND/OR VISIBILITY OF DEVICES SHALL NOT BE BLOCKED BY DOORS IN THE OPEN POSITION.

13. PENETRATIONS THROUGH FIRE–RATED WALLS AND FLOORS SHALL BE SEALED TO MAINTAIN FIRE RATINGS. UTILIZE 3M CP25, PUTTY 303 OR EQUIVALENT.

14. SHOULD PROJECT CONDITIONS REQUIRE DEVIATIONS FROM THE CONSTRUCTION DRAWINGS, MARK SUCH CHANGES ON THE AS–BUILT DRAWINGS. IF THESE CHANGES REQUIRE ALTERNATE METHODS TO THOSE SPECIFIED IN THE CONTRACT DOCUMENTS, SUBMIT DRAWINGS SHOWING THE PROPOSED ALTERNATE METHODS TO THE CONTRACTING OFFICER FOR REVIEW AND APPROVAL. DO NOT PROCEED UNTIL APPROVAL IS OBTAINED FROM THE [CONTRACTING OFFICER.

HANDHOLE SCHEDULE

(21) 13" x 24" ELECTRIC HANDHOLE

(62) 17" x 30" TELECOMMUNICATIONS HANDHOLE

ELECTRICAL SYMBOLS

Ā	BARRED LETTER IN OR ADJACENT TO LTG FIXTURE SYMBOL INDICATES FIXTURE TYPE
	PANELBOARD, 6'–6" TO TOP
	TELECOMM BACKBOARD, 4'W x 8'H x 3/4" THK TERMITE TREATED PLYWOOD, PAINT WITH TWO COATS WHITE FIRE–RETARDANT PAINT
	TELECOMM CABINET, 6'–6" TO TOP
	DUPLEX RECEPTACLE w/ GFCI PROTECTION, NEMA 5–20R, 125V, +18" AFF UON
J	LARGE JUNCTION BOX, SIZE AS INDICATED
J	LARGE JUNCTION BOX, WALL MOUNTED, SIZE AS INDICATED
J	SMALL JUNCTION (OUTLET) BOX
J	SMALL JUNCTION (OUTLET) BOX, WALL MOUNTED
	DISCONNECT SWITCH, HEAVY DUTY, HP–RATED, SIZE AS INDICATED, +5'–6" TO TOP UON
E	EQUIPMENT CONNECTION
C	TELECOMMUNICATION SYSTEM OUTLET BOX, 4–11/16"SQ. x 2–1/8"D w/ SINGLE GANG PLASTER RING, BLANK DEVICE PLATE COVER, +18"AFF UON
$	SINGLE POLE SWITCH, 20A, 120/277V – 3=3 WAY, 4=4 WAY, D=DIMMER, FD=FLUOR DIMMER, M=MANUAL MOTOR SWITCH, P=PILOT, F=FAN CONTROLLER, K=KEY OPERATED, +48" AFF
WP	WEATHERPROOF
CO	CONDUIT ONLY
NL	NIGHT LIGHT
CT	MOUNTED 6" ABOVE COUNTERTOP BACKSPLASH
UON	UNLESS OTHERWISE NOTED
	CONDUIT UP
	CONDUIT DOWN
	CONDUIT & WIRING IN WALL OR CEILING
	CONDUIT & WIRING BELOW REFERENCED PLANE
	CONDUIT & WIRING EXPOSED
	HOMERUN TO APPLICABLE PANEL
	CONDUIT STUB
	FLEXIBLE CONDUIT
C	TELECOMMUNICATION SYSTEM CONDUIT, 1"C MIN w/ PULLSTRING UON
	SHADED AREA DESIGNATES THE REQUIRED WORKING SPACE CLEARANCE PER NEC 110–16. COORDINATE CLEARANCE WITH ALL OTHER TRADES. ENSURE THAT NO OTHER EQUIPMENT, STRUCTURE, OR PERMANENT APPURTENANCE ENCROACHES INTO THIS ZONE.

MINIMUM CONDUIT SIZE SHALL BE 3/4". ANY CIRCUIT W/ NO FURTHER DESIGNATION INDICATES A TWO (2) WIRE CIRCUIT. CIRCUITS W/ ADDITIONAL WIRES ARE INDICATED AS FOLLOWS: —//— 3 WIRES, —////— 4 WIRES, ETC. MINIMUM CONDUCTOR SIZE SHALL BE #12. ALTHOUGH NOT INDICATED A SEPARATE GREEN GROUND CONDUCTOR SIZED PER THE N.E.C. SHALL BE INSTALLED IN ALL BRANCH CIRCUIT CONDUITS.

DUCT DESIGNATION

2 S 4 (A)

- DUCT SECTION "A" SEE DUCT SECTION DETAILS
- CONDUIT SIZE
- SYSTEM "S" SECONDARY ELECTRIC (NORMAL)
  "L" LIGHTING, STREET OR AREA
  "T" TELEPHONE/TELECOMMUNICATIONS
- NUMBER OF DUCTS

14002

HAWAII ARMY NATIONAL GUARD

HDR

A/E INFO

PAUL K. UYEDA
LICENSED PROFESSIONAL ENGINEER
No. 7646-E
HAWAII, U.S.A.
4/30/15

MK ENGINEERS, LTD.
LICENSE EXPIRATION DATE: 4/30/16
SEAL

SYM	DESCRIPTION	DATE	APPR

SUBMITTAL PHASE: FINAL

SUBMITTAL DATE: 03/02/15

DES PKU | DRW MKE | CHK PKU

DEPARTMENT OF DEFENSE
DESIGN AND PROJECT MANAGEMENT BRANCH

HAWAII ARMY NATIONAL GUARD
PHYSICAL SECURITY AND IMPROVEMENTS

STATE OF HAWAII
FACILITY MANAGEMENT OFFICE

HIARNG

HONOLULU, HAWAII

WAIAWA
PERIMETER FENCE

ELECTRICAL SYMBOLS AND NOTES

SCALE: AS NOTED

STATE JOB NO. CA–1328–D

FEDERAL PROJECT NO. 15140023

SHEET 21 OF 25

E-01

W:\01_PROJECTS\2014\14002-HIARNG_Phy_Sec_Loc\01a2_Waiawa\14002e2E01sym.dwg, Layout1, 3/3/2015 11:08:24 AM, Dwyre, PDF995, 1:1

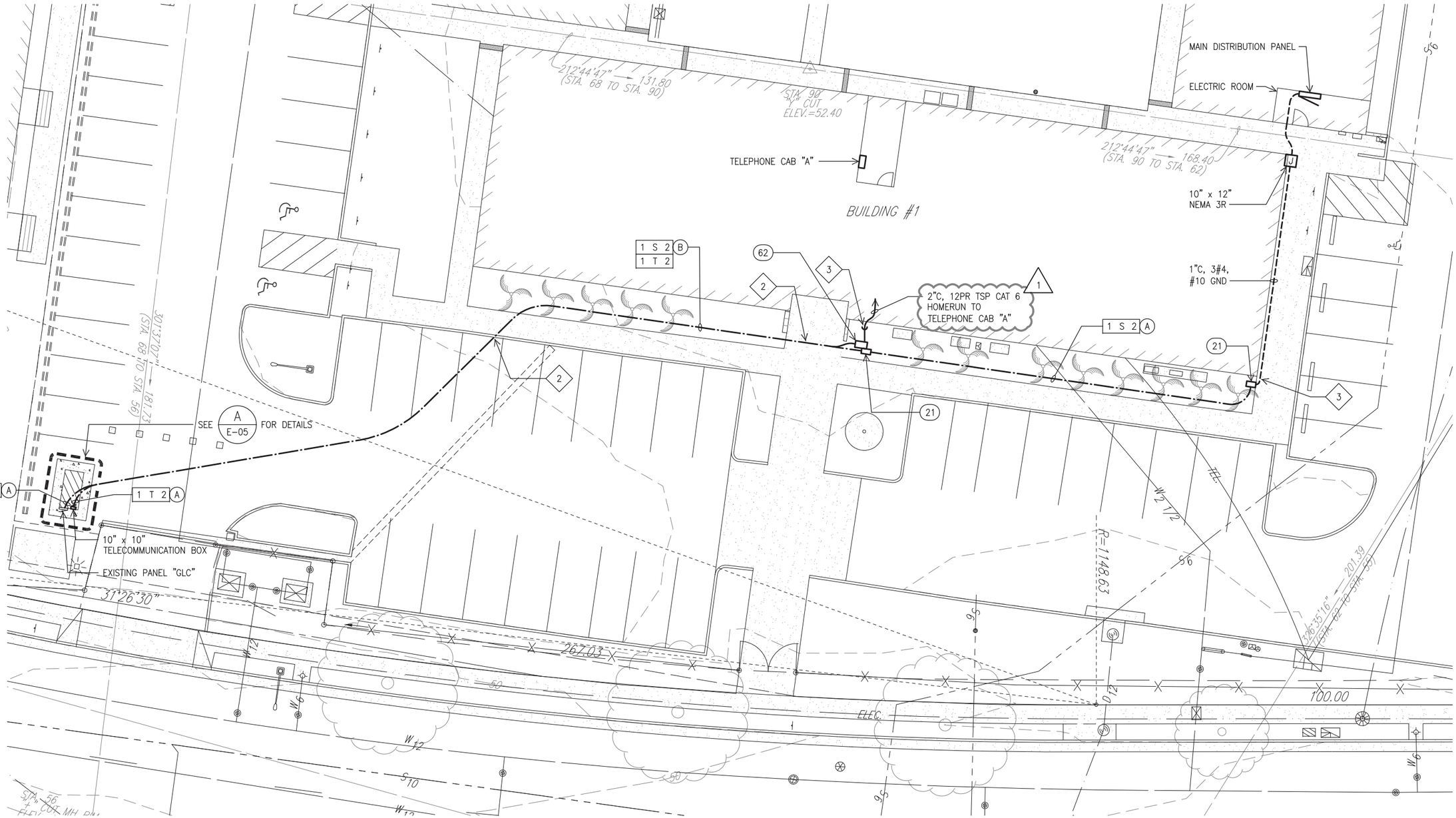

SITE ELECTRICAL PLAN

SCALE: 3/32" = 1'-0"

NOTES:

1. LIGHT LINES DENOTE EXISTING CONDITION
   BOLD LINES DENOTE NEW WORK
2. SAWCUT AND PATCH TO MATCH PATCHWORK WITH THAT OF EXISTING SIDEWALK.
3. SURFACE MOUNT CONDUIT TO EXTERIOR WALL. ROUTE BELOW GROUND TO HANDHOLE.

0' 4' 8' 16' 24' 32'

3/32" = 1'-0"

14002

HAWAII ARMY NATIONAL GUARD

HDR

A/E INFO

PAUL K. UYEDA LICENSED PROFESSIONAL ENGINEER No. 7646-E HAWAII, U.S.A. 4/16/15

MK ENGINEERS, LTD.
LICENSE EXPIRATION DATE: 4/30/16

SEAL

SYM	DESCRIPTION	DATE	APPR
1	ADDENDUM 1	4/17/15	

SUBMITTAL PHASE: FINAL

SUBMITTAL DATE: 03/02/15

DES PKU | DRW MKE | CHK PKU

DEPARTMENT OF DEFENSE
DESIGN AND PROJECT MANAGEMENT BRANCH

HAWAII ARMY NATIONAL GUARD
PHYSICAL SECURITY AND IMPROVEMENTS

HONOLULU, HAWAII

WAIAWA
PERIMETER FENCE

SITE ELECTRICAL PLAN

STATE OF HAWAII
FACILITY MANAGEMENT OFFICE

HIARNG

SCALE: AS NOTED

STATE JOB NO. CA-1328-D

FEDERAL PROJECT NO. 15140023

SHEET 22 OF 25

E-02

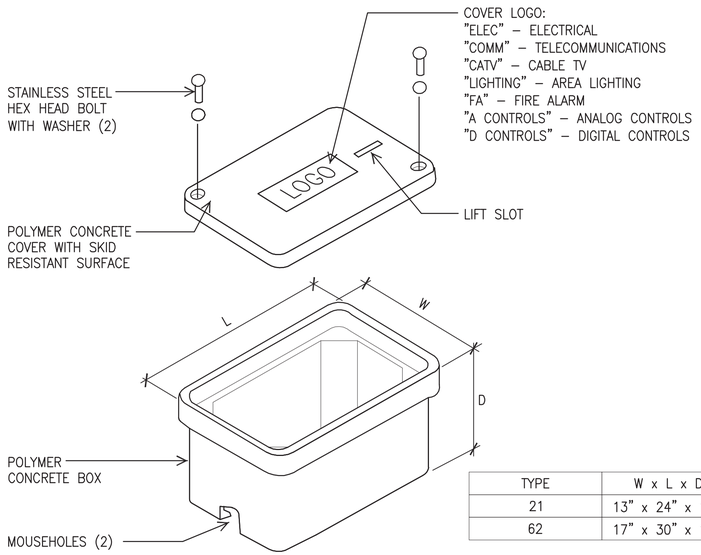

TYPE	W x L x D
21	13" x 24" x 18"
62	17" x 30" x 18"

A / E-03 SMALL POLYMER CONCRETE PULLBOX DETAIL

NOT TO SCALE

NOTES:

1. PULLBOX ASSEMBLY SHALL HAVE A 10,400 LB. DESIGN LOAD (8,000 LB. WHEEL LOAD TIMES 1.3 IMPACT FACTOR) RATING IN ACCORDANCE WITH ASTM C857 A–8 VEHICLE AND PEDESTRIAN LOADING.
2. BOX AND BASE SHALL NOT CONTAIN STEEL REINFORCING.
3. PULLBOX SHALL BE SET ON COMPACTED GRANULAR FILL. PROVIDE BUILD–UP BRICKS WITH MORTAR AS NECESSARY TO ACCOMMODATE DUCTLINE ENTRIES.
4. PROVIDE CONCRETE COLLAR RING SURROUNDING PULLBOX, SEE B / E-03.
5. BOXES SHALL BE MANUFACTURED BY ARMORCAST OR EQUIVALENT. EQUIVALENT MUST BE SUBMITTED FOR APPROVAL PRIOR TO BIDDING.

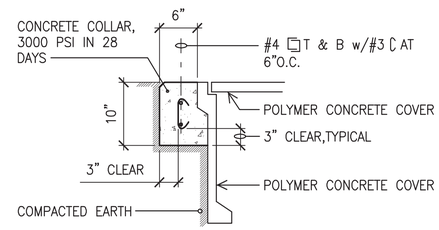

B / E-03 CONCRETE COLLAR RING

NOT TO SCALE

14002

HAWAII ARMY NATIONAL GUARD

HDR

A/E INFO

PAUL K. UYEDA
LICENSED PROFESSIONAL ENGINEER
No. 7646-E
HAWAII, U.S.A.
3/3/15

MK ENGINEERS, LTD.
LICENSE EXPIRATION DATE: 4/30/16

SEAL

SYM	DESCRIPTION	DATE	APPR

SUBMITTAL PHASE: FINAL

SUBMITTAL DATE: 03/02/15

DES PKU | DRW MKE | CHK PKU

DEPARTMENT OF DEFENSE
DESIGN AND PROJECT MANAGEMENT BRANCH

HAWAII ARMY NATIONAL GUARD
PHYSICAL SECURITY AND IMPROVEMENTS

HONOLULU, HAWAII

WAIAWA
PERIMETER FENCE

PULLBOX DETAILS

STATE OF HAWAII
FACILITY MANAGEMENT OFFICE

HIARNG

SCALE: AS NOTED

STATE JOB NO. CA–1328–D

FEDERAL PROJECT NO. 15140023

SHEET 23 OF 25

E-03

W:\01_PROJECTS\2014\14002-HIARNG_Phy_Sec_Loc\01a2_Waiawa\14002a2-E03-pdET.dwg, Layout1, 3/3/2015 11:09:29 AM, Dwyn, PDF995, 1:1

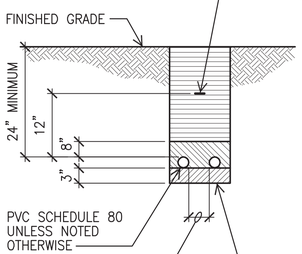

TRACEABLE WARNING TAPE WITH "CAUTION–ELECTRIC/COMMUNICATIONS CABLE BELOW" IMPRINTED ON TAPE. WARNING TAPE SHALL BE PLACE OVER ENTIRE LENGTH OF DUCTLINE [TRACEABLE ELECTRICAL WARNING MARKER TAPE IN ACCORDANCE WITH HECo SPEC. M0302]

BACKFILL:

TYPE "A" : [EITHER MATERIAL CONFORMING TO THE REQUIREMENTS OF THE CITY AND COUNTY OF HONOLULU STANDARD SPECIFICATION FOR PUBLIC WORKS CONSTRUCTION, DATED SEPTEMBER 1986, SECTION 16 – "BORROW", OR] NON–CONTAMINATED NATIVE SOIL MATERIAL WHICH DOES NOT CONTAIN MORE THAN 50% GRAVEL, AND ALSO, DOES NOT CONTAIN HARD LUMPS OF EARTH 3 INCHES IN GREATEST DIMENSION, ROCKS LARGER THAN 3 INCHES IN LARGEST DIMENSION, HIGHLY PLASTIC CLAY, POORLY–GRADED SAND AND GRAVEL (CLASSIFIED AS SP AND GP USING THE UNITED SOIL CLASSIFICATION SYSTEM), ORGANICS, DEBRIS, OR OTHER UNSUITABLE OR DELETERIOUS MATERIALS.

TYPE "B" : SELECT GRANULAR MATERIAL PASSING A ONE (1) INCH SIEVE SUCH AS THREE–QUARTER (3/4) INCH AGGREGATE BASE COURSE GRAVEL, S4C OR MATERIAL THAT IS FREE OF ORGANICS, DEBRIS OR HIGHLY–PLASTIC CLAY AND MEETS THE FOLLOWING GRADATION:

SLEEVE SIZE	PERCENT PASSING BY WEIGHT
1"	100
3/4"	90 – 100
No. 4	35 – 100
No. 40	10 – 30
No. 200	3 – 15

NOTE: IF THE NORMAL MATERIAL IN BOTTOM OF TRENCH IS NOT TYPE "B" AN ADDITIONAL 3" SHALL BE EXCAVATED AND TYPE "B" BACKFILL SHALL BE PROVIDED.

A / E-04 TYPICAL DUCT SECTION (DIRECT BURIED)

NOT TO SCALE

NOTES:

1. WHERE TRENCH ENCOUNTERS EXISTING CONCRETE OR ASPHALT CONCRETE, SURFACE SHALL BE SAWCUT. BACKFILL, COMPACT AND PATCH SURFACE TO MATCH ADJACENT AREA. SEE TRENCH RESTORATION DETAIL.
2. PROVIDE 3" SEPARATION BETWEEN DUCTS OF SAME SYSTEM AND 12" SEPARATION BETWEEN ELECTRICAL DUCTS AND DUCTS OF DIFFERENT SYSTEMS.

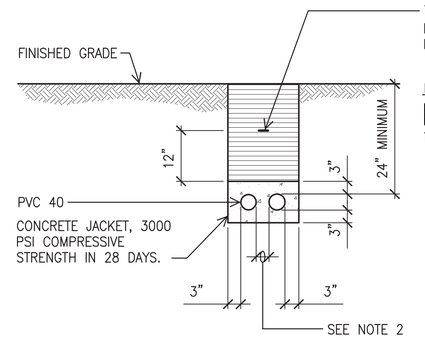

TRACEABLE WARNING TAPE WITH "CAUTION–ELECTRIC/COMMUNICATIONS CABLE BELOW" IMPRINTED ON TAPE. WARNING TAPE SHALL BE PLACED OVER ENTIRE LENGTH OF DUCTLINE

BACKFILL:

TYPE "A" : NON–CONTAMINATED NATIVE SOIL MATERIAL WHICH DOES NOT CONTAIN MORE THAN 50% GRAVEL, AND ALSO, DOES NOT CONTAIN HARD LUMPS OF EARTH 3 INCHES IN GREATEST DIMENSION, ROCKS LARGER THAN 3 INCHES IN LARGEST DIMENSION, HIGHLY PLASTIC CLAY, POORLY–GRADED SAND AND GRAVEL (CLASSIFIED AS SP AND GP USING THE UNITED SOIL CLASSIFICATION SYSTEM), ORGANICS, DEBRIS, OR OTHER UNSUITABLE OR DELETERIOUS MATERIALS.

B / E-04 TYPICAL DUCT SECTION (CONCRETE ENCASED)

NOT TO SCALE

NOTES:

1. ELECTRICAL AND TELEPHONE DUCTS SIMILAR.
2. PROVIDE 2" SEPARATION BETWEEN DUCTS OF SAME SYSTEM AND 3" BETWEEN DUCTS OF DIFFERENT SYSTEMS.
3. WHERE TRENCH ENCOUNTERS EXISTING CONCRETE OR ASPHALT CONCRETE, SURFACE SHALL BE SAWCUT. BACKFILL, COMPACT AND PATCH SURFACE TO MATCH ADJACENT AREA. SEE TRENCH RESTORATION DETAIL.
4. SEE DUCT SECTION DETAILS FOR CONDUIT ARRANGEMENT.

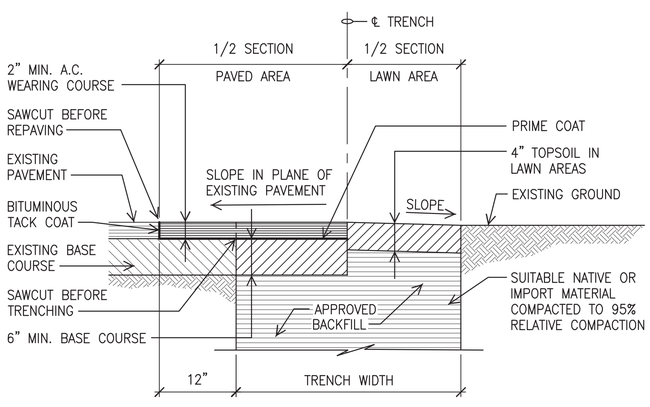

C / E-04 TRENCH RESTORATION DETAIL

NOT TO SCALE

SECTION A SECTION B

DUCT SECTION DETAILS

NOT TO SCALE

14002

HAWAII ARMY NATIONAL GUARD

HDR

A/E INFO

PAUL K. UYEDA LICENSED PROFESSIONAL ENGINEER No. 7646-E HAWAII, U.S.A. 3/2/15

MK ENGINEERS, LTD.
LICENSE EXPIRATION DATE: 4/30/16

SEAL

SYM	DESCRIPTION	DATE	APPR

SUBMITTAL PHASE: FINAL

SUBMITTAL DATE: 03/02/15

DES PKU | DRW MKE | CHK PKU

DEPARTMENT OF DEFENSE
DESIGN AND PROJECT MANAGEMENT BRANCH
HONOLULU, HAWAII

HAWAII ARMY NATIONAL GUARD
PHYSICAL SECURITY AND IMPROVEMENTS

WAIAWA PERIMETER FENCE

DUCT SECTION DETAILS

STATE OF HAWAII
FACILITY MANAGEMENT OFFICE
HIARNG

SCALE: AS NOTED

STATE JOB NO. CA-1328-D

FEDERAL PROJECT NO. 15140023

SHEET 24 OF 25

E-04

W:\51_PROJECTS\20141\14002-HIARNG_Phy_Sec_Loc\01a2_Waiawa\14002-E04-DS46.dwg, Layout1, 3/3/2015 11:11:04 AM, Deps, FSP 960, 1:1

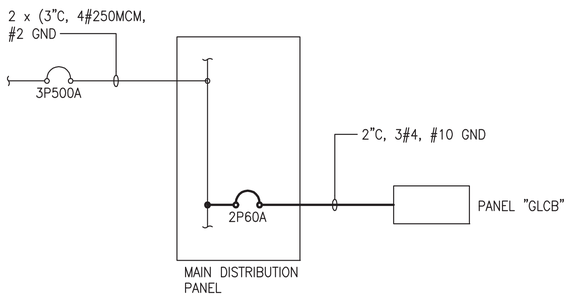

ONE-LINE DIAGRAM

NO SCALE

NOTES:

1. ——— LIGHT LINES DENOTE EXISTING CONDITION
   ——— BOLD LINES DENOTE NEW WORK

DISTRIBUTION PANEL

VOLTAGE: 208Y/120V, 3 PH, 4W
BUS RATING: 600A
AIC: 22,000
MAIN BKR: LUGS ONLY
TYPE: BOLT-ON
MOUNT: SURFACE
ENCLOSURE: NEMA 1
EQUIPMENT GROUND BUS: YES

KVA A	KVA B	KVA C	DESCRIPTION: L-LIGHTS R-RECEPTACLE, S-SPARE PFB-PROV FOR FUTURE CB	CKT BKR	CKT NO	CKT NO	CKT BKR	DESCRIPTION: L-LIGHTS R-RECEPTACLE, S-SPARE PFB-PROV FOR FUTURE CB	KVA A	KVA B	KVA C
17.0			PANEL C	3P225A	1	2	3P125A	S			
	17.0		PART OF 1	--------	3	4	--------	PART OF 2			
		17.0	PART OF 1	--------	5	6	--------	PART OF 2			
10.0			PANEL E	3P125A	7	8	3P125A	PANEL D	9.0		
	10.0		PART OF 20	--------	9	10	--------	PART OF 8		9.0	
		10.0	PART OF 20	--------	11	12	--------	PART OF 8			9.0
13.0			PANEL B	3P225A	13	14	2P60A*	GUARD SHACK (NEW)	2.3		
	13.0		PART OF 13	--------	15	16	--------	PART OF 25		2.4	
		13.0	PART OF 13	--------	17	18		PFB			
			PFB		19	20		PFB			
			PFB		21	22		PFB			
			PFB		23	24		PFB			
40.0	40.0	40.0		SUBTOTALS					11.3	11.4	9.0

151.7 TOTAL KVA
0.8 DEMAND FACTOR
121.4 DEMAND KVA
337 DEMAND AMPS 208 volts

NOTES:
1) * - PROVIDE NEW CIRCUIT BREAKER

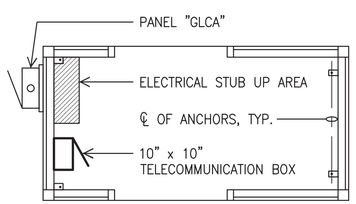

A / E-05 GUARD SHACK DETAIL

SCALE: 1/2" = 1'-0"

NOTES:

1. ——— LIGHT LINES DENOTE EXISTING CONDITION
   ——— BOLD LINES DENOTE NEW WORK

PANEL "GLC" GE CAT NUMBER TLM1212RCU

VOLTAGE: 208/120V, 1 PH, 3W
BUS: COPPER
BUS RATING: 125A
AIC: 10,000
MAIN BKR: 2P40A
TYPE: PLUG-IN
MOUNT: SURFACE
ENCLOSURE: NEMA 3R
EQUIPMENT GROUND BUS: YES
ISOLATED GROUND BUS: NO
FEED THRU LUGS: NO
U.L. LISTED AS SERVICE ENTRANCE EQUIPMENT: NO

KVA A	KVA B	DESCRIPTION: L-LIGHTS R-RECEPTACLE, S-SPARE PFB-PROV FOR FUTURE CB	CKT BKR	CKT NO	CKT NO	CKT BKR	DESCRIPTION: L-LIGHTS R-RECEPTACLE, S-SPARE PFB-PROV FOR FUTURE CB	KVA A	KVA B
1.6		HVAC	1P20A	1	2	1P20A	R-GFCI	0.2	
	1.2	L-GUARD SHACK	1P20A	3	4	1P20A	R-GUARD SHACK		0.2
		PFB-PROV FOR FUTURE CB		5	6	1P20A	PFB-PROV FOR FUTURE CB		
		PFB-PROV FOR FUTURE CB		7	8	1P20A	PFB-PROV FOR FUTURE CB		
1.6	1.2	SUBTOTALS						0.2	0.2

3.2 TOTAL KVA
0.8 DEMAND FACTOR
2.6 DEMAND KVA
12 DEMAND AMPS 208 volts

NOTES:
1) * - PROVIDE BREAKER WITH PADLOCKING DEVICE
2) ** - PROVIDE DEDICATED NEUTRAL
3) + - PROVIDE ISOLATED GND CONDUCTOR W/BRANCH WIRING
3) ++ - PROVIDE WITH GFCI TYPE BREAKER

14002

HAWAII ARMY NATIONAL GUARD

HDR

A/E INFO

PAUL K. UYEDA
LICENSED PROFESSIONAL ENGINEER
No. 7646-E
HAWAII, U.S.A.
3/3/15

MK ENGINEERS, LTD.
LICENSE EXPIRATION DATE: 4/30/16
SEAL

SYM	DESCRIPTION	DATE	APPR

SUBMITTAL PHASE: FINAL
SUBMITTAL DATE: 03/02/15
DES PKU DRW MKE CHK PKU

DEPARTMENT OF DEFENSE
DESIGN AND PROJECT MANAGEMENT BRANCH
HAWAII ARMY NATIONAL GUARD
PHYSICAL SECURITY AND IMPROVEMENTS
STATE OF HAWAII
FACILITY MANAGEMENT OFFICE
HIARNG

HONOLULU, HAWAII
WAIAWA
PERIMETER FENCE

ONE-LINE DIAGRAM, PANEL SCHEDULES AND GUARD SHACK DETAIL

SCALE: AS NOTED
STATE JOB NO. CA-1328-D
FEDERAL PROJECT NO. 15140023
SHEET 25 OF 25
E-05

W:\01_PROJECTS\0141\14002-HIARNG_Phy_Sec_Loc\01a2_Waiawa\14002e2E05-1fpdBCHE.dwg, Layout1, 3/3/2015 11:10:40 AM, Dwyn, PDF995, 1:1